BS2p24-IC MODULE Rev. B

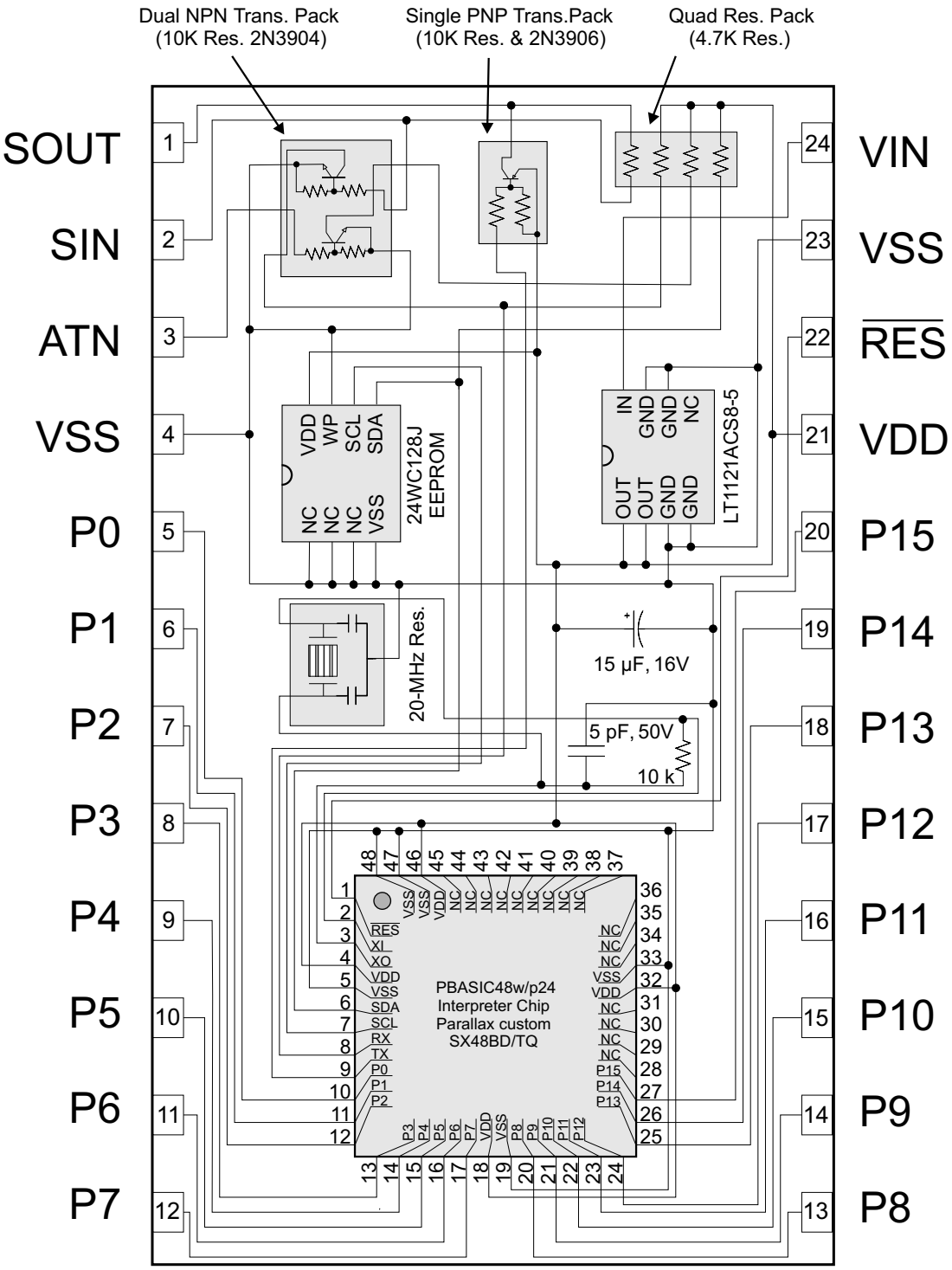

Connect DSR and RTS for automatic port detection.

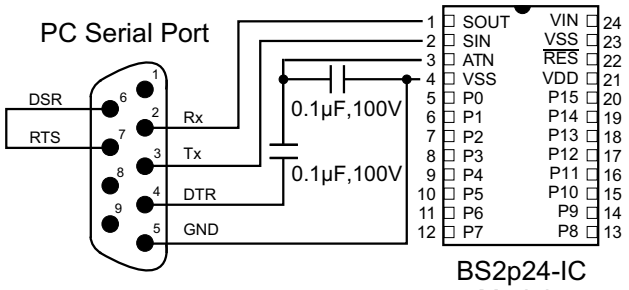

PC - to - BS2p24-IC connection