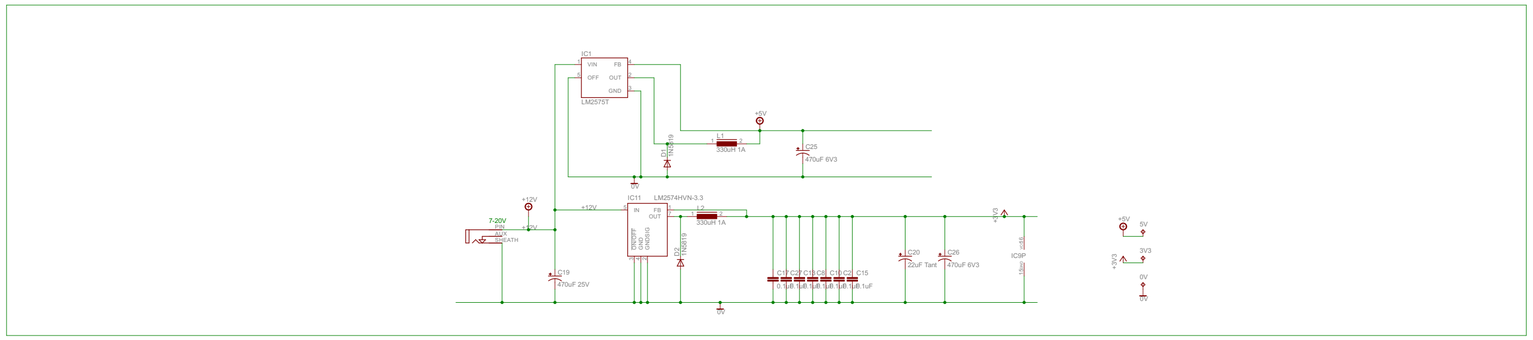
IC1
LM2575T
IC11
LM2574HVN-3.3
7-20V
+12V
+5V
+3V3
IC9P
5V
3V3
0V

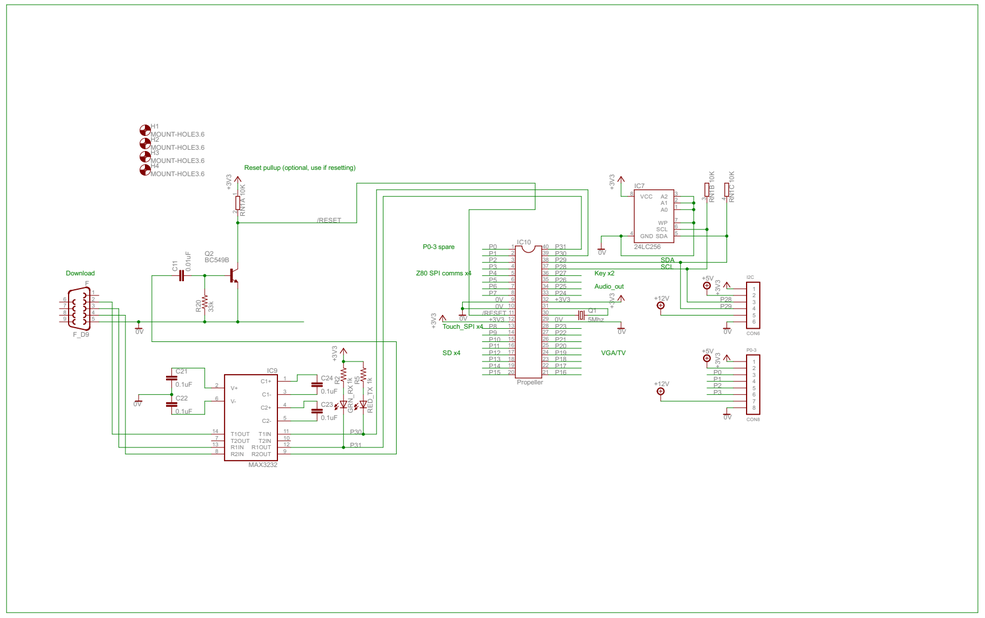
Reset pullup (optional, use if resetting)
Download
F_D9
Q2
BC549B
MAX3232
IC9
IC10
Propeller
P0-3 spare
Z80 SPI comms x4
Touch_SPI x4
SD x4
Key x2
Audio_out
VGA/TV
IC7
24LC256
SDA
SCL
CON6
CON8

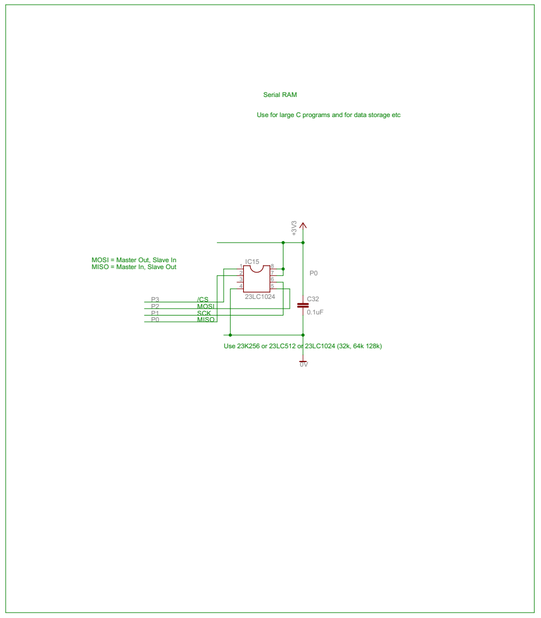
Serial RAM
Use for large C programs and for data storage etc
MOSI = Master Out, Slave In
MISO = Master In, Slave Out
IC15
23LC1024
Use 23K256 or 23LC512 or 23LC1024 (32k, 64k 128k)

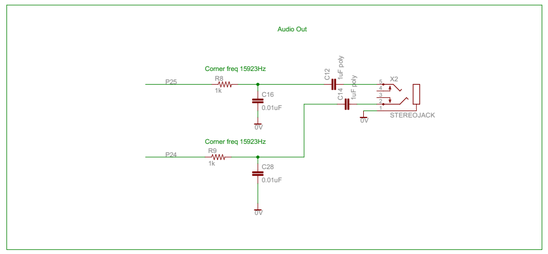
Audio Out
Corner freq 15923Hz
STEREOJACK

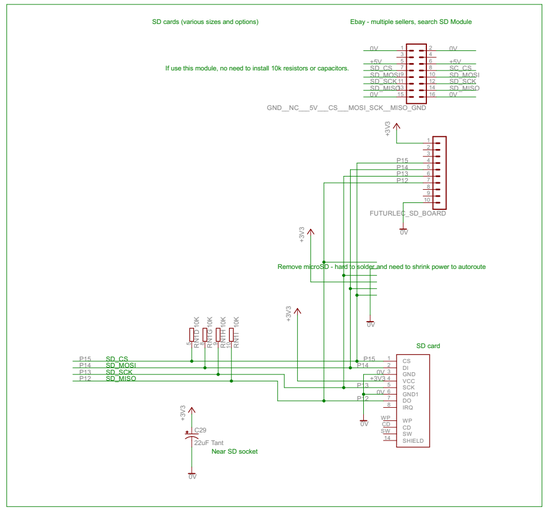
SD cards (various sizes and options)
Ebay - multiple sellers, search SD Module
If use this module, no need to install 10k resistors or capacitors.
GND__NC___5V___CS___MOSI_SCK__MISO_GND
FUTURLEC_SD_BOARD
Remove microSD - hard to solder and need to shrink power to autoroute
SD card
Near SD socket

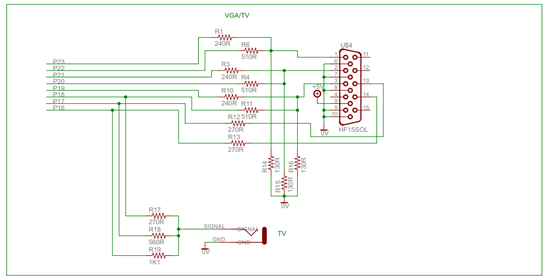
VGA/TV
HF15SOL
TV

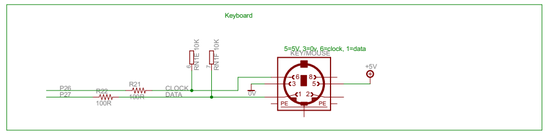
Keyboard
5=5V, 3=0V, 6=clock, 1=data
PS2_MINI

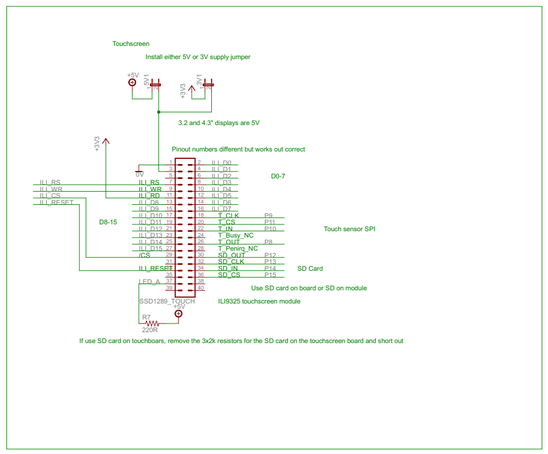
Touchscreen
Install either 5V or 3V supply jumper
3.2 and 4.3" displays are 5V
Pinout numbers different but works out correct
D0-7
D8-15
Touch sensor SPI
SD Card
Use SD card on board or SD on module
ILI9325 touchscreen module
SSD1289_TOUCH
If use SD card on touchboars, remove the 3x2k resistors for the SD card on the touchscreen board and short out

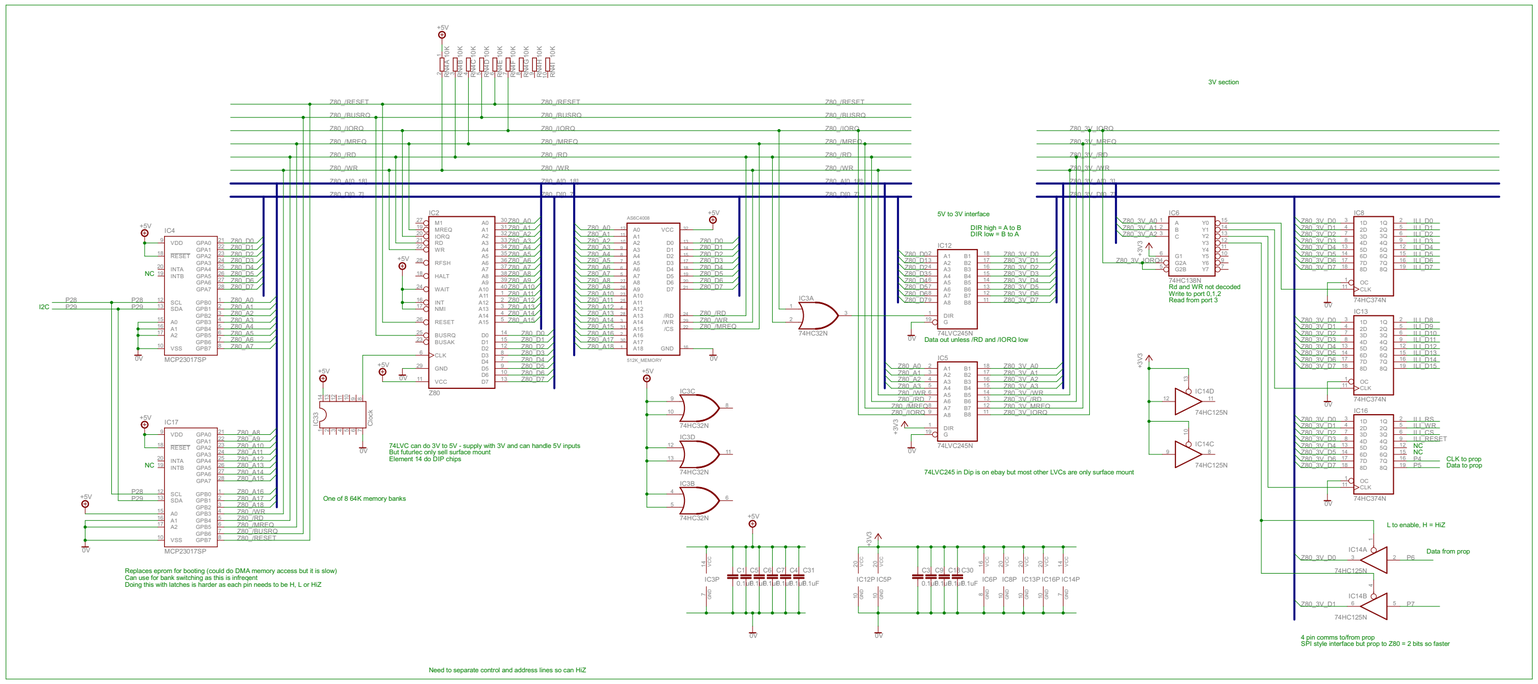
3V section
5V to 3V interface
DIR high = A to B
DIR low = B to A
74LVC245 in Dip is on ebay but most other LVCs are only surface mount
74LVC can do 3V to 5V - supply with 3V and can handle 5V inputs
But futurlec only sell surface mount
Element 14 do DIP chips
One of 8 64K memory banks
Replaces eprom for booting (could do DMA memory access but it is slow)
Can use for bank switching as this is infregent
Doing this with latches is harder as each pin needs to be H, L or HiZ
Need to separate control and address lines so can HiZ
4 pin comms to/from prop
SPI style interface but prop to Z80 = 2 bits so faster
L to enable, H = HIZ
Data from prop
CLK to prop
Data to prop