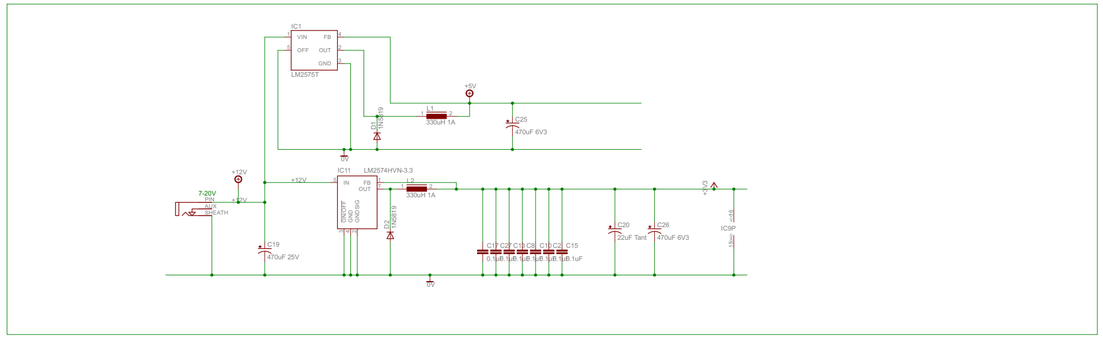
IC1
LM2575T
VIN
FB
OFF
OUT
GND
+5V
L1
330uH 1A
C25
470uF 6V3
D1
1N5819
+12V
IC11
LM2574HVN-3.3
IN
FB
OUT
ON/OFF
GND
UNCONN
D2
1N5819
L2
330uH 1A
+3V3
7-20V
P9
12V
BEATH
C19
470uF 25V
C19 C23 C18 C16 C17 C15
0.1uF 0.1uF 0.1uF 0.1uF 0.1uF 0.1uF
C20
22uF Tant
C26
470uF 6V3
ICSP
5x5
1.27mm

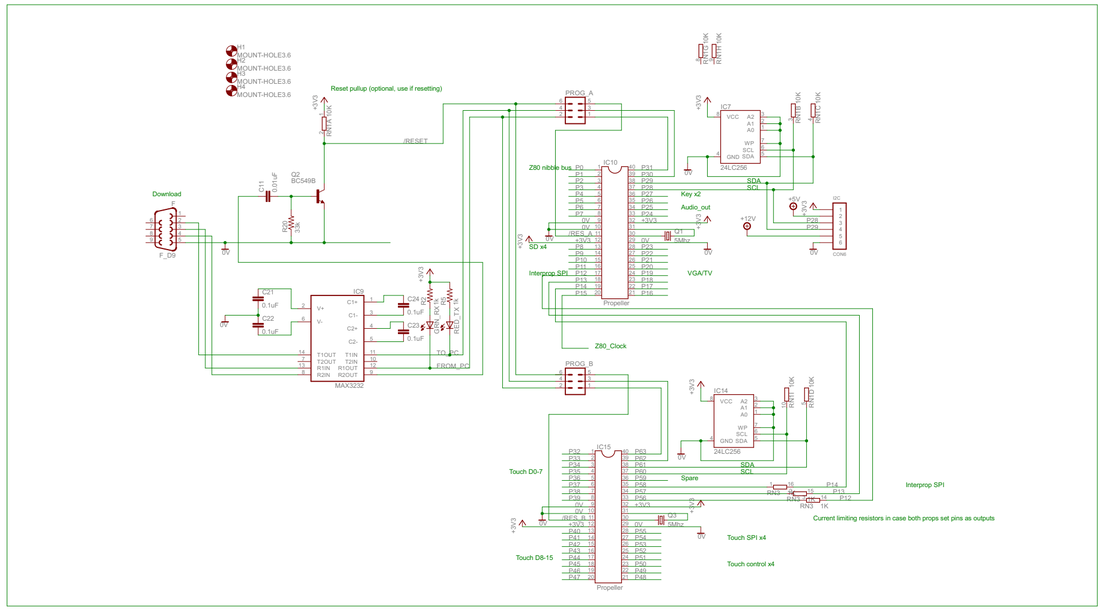
N1
MOUNT-HOLE3.6
N2
MOUNT-HOLE3.6
N3
MOUNT-HOLE3.6
N4
MOUNT-HOLE3.6
Reset pullup (optional, use if resetting)
+3V3
RN1 10K
/RESET
Download
P_2M
C11
0.01uF
Q2
BC549B
R20
1K
IC21
0.1uF
C22
0.1uF
IC9
MAX3232
V+
V-
C1+
C1-
C2+
C2-
T1OUT
T2OUT
R1IN
R2IN
T1IN
T2IN
R1OUT
R2OUT
C24
0.1uF
C23
0.1uF
R2
10K
RED_TX
R1
10K
GRN_RX
TO_PC
FROM_PC
PROG_A
PROG_B
IC10
Propeller
Z80 nibble bus
Key x2
Audio_out
SD x4
Interprop SPI
VGA/TV
Z80_Clock
IC7
24LC256
IC14
24LC256
SDA
SCL
RN2 10K
RN3 10K
RN4 10K
RN5 10K
RN6 10K
RN7 10K
RN8 10K
RN9 10K
RN10 10K
RN11 10K
RN12 10K
RN13 10K
RN14 10K
RN15 10K
RN16 10K
RN17 10K
RN18 10K
RN19 10K
RN20 10K
RN21 10K
RN22 10K
RN23 10K
RN24 10K
RN25 10K
RN26 10K
RN27 10K
RN28 10K
RN29 10K
RN30 10K
RN31 10K
RN32 10K
RN33 10K
RN34 10K
RN35 10K
RN36 10K
RN37 10K
RN38 10K
RN39 10K
RN40 10K
RN41 10K
RN42 10K
RN43 10K
RN44 10K
RN45 10K
RN46 10K
RN47 10K
RN48 10K
RN49 10K
RN50 10K
RN51 10K
RN52 10K
RN53 10K
RN54 10K
RN55 10K
RN56 10K
RN57 10K
RN58 10K
RN59 10K
RN60 10K
RN61 10K
RN62 10K
RN63 10K
RN64 10K
RN65 10K
RN66 10K
RN67 10K
RN68 10K
RN69 10K
RN70 10K
RN71 10K
RN72 10K
RN73 10K
RN74 10K
RN75 10K
RN76 10K
RN77 10K
RN78 10K
RN79 10K
RN80 10K
RN81 10K
RN82 10K
RN83 10K
RN84 10K
RN85 10K
RN86 10K
RN87 10K
RN88 10K
RN89 10K
RN90 10K
RN91 10K
RN92 10K
RN93 10K
RN94 10K
RN95 10K
RN96 10K
RN97 10K
RN98 10K
RN99 10K
RN100 10K
RN101 10K
RN102 10K
RN103 10K
RN104 10K
RN105 10K
RN106 10K
RN107 10K
RN108 10K
RN109 10K
RN110 10K
RN111 10K
RN112 10K
RN113 10K
RN114 10K
RN115 10K
RN116 10K
RN117 10K
RN118 10K
RN119 10K
RN120 10K
RN121 10K
RN122 10K
RN123 10K
RN124 10K
RN125 10K
RN126 10K
RN127 10K
RN128 10K
RN129 10K
RN130 10K
RN131 10K
RN132 10K
RN133 10K
RN134 10K
RN135 10K
RN136 10K
RN137 10K
RN138 10K
RN139 10K
RN140 10K
RN141 10K
RN142 10K
RN143 10K
RN144 10K
RN145 10K
RN146 10K
RN147 10K
RN148 10K
RN149 10K
RN150 10K
RN151 10K
RN152 10K
RN153 10K
RN154 10K
RN155 10K
RN156 10K
RN157 10K
RN158 10K
RN159 10K
RN160 10K
RN161 10K
RN162 10K
RN163 10K
RN164 10K
RN165 10K
RN166 10K
RN167 10K
RN168 10K
RN169 10K
RN170 10K
RN171 10K
RN172 10K
RN173 10K
RN174 10K
RN175 10K
RN176 10K
RN177 10K
RN178 10K
RN179 10K
RN180 10K
RN181 10K
RN182 10K
RN183 10K
RN184 10K
RN185 10K
RN186 10K
RN187 10K
RN188 10K
RN189 10K
RN190 10K
RN191 10K
RN192 10K
RN193 10K
RN194 10K
RN195 10K
RN196 10K
RN197 10K
RN198 10K
RN199 10K
RN200 10K
RN201 10K
RN202 10K
RN203 10K
RN204 10K
RN205 10K
RN206 10K
RN207 10K
RN208 10K
RN209 10K
RN210 10K
RN211 10K
RN212 10K
RN213 10K
RN214 10K
RN215 10K
RN216 10K
RN217 10K
RN218 10K
RN219 10K
RN220 10K
RN221 10K
RN222 10K
RN223 10K
RN224 10K
RN225 10K
RN226 10K
RN227 10K
RN228 10K
RN229 10K
RN230 10K
RN231 10K
RN232 10K
RN233 10K
RN234 10K
RN235 10K
RN236 10K
RN237 10K
RN238 10K
RN239 10K
RN240 10K
RN241 10K
RN242 10K
RN243 10K
RN244 10K
RN245 10K
RN246 10K
RN247 10K
RN248 10K
RN249 10K
RN250 10K
RN251 10K
RN252 10K
RN253 10K
RN254 10K
RN255 10K
RN256 10K
RN257 10K
RN258 10K
RN259 10K
RN260 10K
RN261 10K
RN262 10K
RN263 10K
RN264 10K
RN265 10K
RN266 10K
RN267 10K
RN268 10K
RN269 10K
RN270 10K
RN271 10K
RN272 10K
RN273 10K
RN274 10K
RN275 10K
RN276 10K
RN277 10K
RN278 10K
RN279 10K
RN280 10K
RN281 10K
RN282 10K
RN283 10K
RN284 10K
RN285 10K
RN286 10K
RN287 10K
RN288 10K
RN289 10K
RN290 10K
RN291 10K
RN292 10K
RN293 10K
RN294 10K
RN295 10K
RN296 10K
RN297 10K
RN298 10K
RN299 10K
RN300 10K
RN301 10K
RN302 10K
RN303 10K
RN304 10K
RN305 10K
RN306 10K
RN307 10K
RN308 10K
RN309 10K
RN310 10K
RN311 10K
RN312 10K
RN313 10K
RN314 10K
RN315 10K
RN316 10K
RN317 10K
RN318 10K
RN319 10K
RN320 10K
RN321 10K
RN322 10K
RN323 10K
RN324 10K
RN325 10K
RN326 10K
RN327 10K
RN328 10K
RN329 10K
RN330 10K
RN331 10K
RN332 10K
RN333 10K
RN334 10K
RN335 10K
RN336 10K
RN337 10K
RN338 10K
RN339 10K
RN340 10K
RN341 10K
RN342 10K
RN343 10K
RN344 10K
RN345 10K
RN346 10K
RN347 10K
RN348 10K
RN349 10K
RN350 10K
RN351 10K
RN352 10K
RN353 10K
RN354 10K
RN355 10K
RN356 10K
RN357 10K
RN358 10K
RN359 10K
RN360 10K
RN361 10K
RN362 10K
RN363 10K
RN364 10K
RN365 10K
RN366 10K
RN367 10K
RN368 10K
RN369 10K
RN370 10K
RN371 10K
RN372 10K
RN373 10K
RN374 10K
RN375 10K
RN376 10K
RN377 10K
RN378 10K
RN379 10K
RN380 10K
RN381 10K
RN382 10K
RN383 10K
RN384 10K
RN385 10K
RN386 10K
RN387 10K
RN388 10K
RN389 10K
RN390 10K
RN391 10K
RN392 10K
RN393 10K
RN394 10K
RN395 10K
RN396 10K
RN397 10K
RN398 10K
RN399 10K
RN400 10K
RN401 10K
RN402 10K
RN403 10K
RN404 10K
RN405 10K
RN406 10K
RN407 10K
RN408 10K
RN409 10K
RN410 10K
RN411 10K
RN412 10K
RN413 10K
RN414 10K
RN415 10K
RN416 10K
RN417 10K
RN418 10K
RN419 10K
RN420 10K
RN421 10K
RN422 10K
RN423 10K
RN424 10K
RN425 10K
RN426 10K
RN427 10K
RN428 10K
RN429 10K
RN430 10K
RN431 10K
RN432 10K
RN433 10K
RN434 10K
RN435 10K
RN436 10K
RN437 10K
RN438 10K
RN439 10K
RN440 10K
RN441 10K
RN442 10K
RN443 10K
RN444 10K
RN445 10K
RN446 10K
RN447 10K
RN448 10K
RN449 10K
RN450 10K
RN451 10K
RN452 10K
RN453 10K
RN454 10K
RN455 10K
RN456 10K
RN457 10K
RN458 10K
RN459 10K
RN460 10K
RN461 10K
RN462 10K
RN463 10K
RN464 10K
RN465 10K
RN466 10K
RN467 10K
RN468 10K
RN469 10K
RN470 10K
RN471 10K
RN472 10K
RN473 10K
RN474 10K
RN475 10K
RN476 10K
RN477 10K
RN478 10K
RN479 10K
RN480 10K
RN481 10K
RN482 10K
RN483 10K
RN484 10K
RN485 10K
RN486 10K
RN487 10K
RN488 10K
RN489 10K
RN490 10K
RN491 10K
RN492 10K
RN493 10K
RN494 10K
RN495 10K
RN496 10K
RN497 10K
RN498 10K
RN499 10K
RN500 10K
RN501 10K
RN502 10K
RN503 10K
RN504 10K
RN505 10K
RN506 10K
RN507 10K
RN508 10K
RN509 10K
RN510 10K
RN511 10K
RN512 10K
RN513 10K
RN514 10K
RN515 10K
RN516 10K
RN517 10K
RN518 10K
RN519 10K
RN520 10K
RN521 10K
RN522 10K
RN523 10K
RN524 10K
RN525 10K
RN526 10K
RN527 10K
RN528 10K
RN529 10K
RN530 10K
RN531 10K
RN532 10K
RN533 10K
RN534 10K
RN535 10K
RN536 10K
RN537 10K
RN538 10K
RN539 10K
RN540 10K
RN541 10K
RN542 10K
RN543 10K
RN544 10K
RN545 10K
RN546 10K
RN547 10K
RN548 10K
RN549 10K
RN550 10K
RN551 10K
RN552 10K
RN553 10K
RN554 10K
RN555 10K
RN556 10K
RN557 10K
RN558 10K
RN559 10K
RN560 10K
RN561 10K
RN562 10K
RN563 10K
RN564 10K
RN565 10K
RN566 10K
RN567 10K
RN568 10K
RN569 10K
RN570 10K
RN571 10K
RN572 10K
RN573 10K
RN574 10K
RN575 10K
RN576 10K
RN577 10K
RN578 10K
RN579 10K
RN580 10K
RN581 10K
RN582 10K
RN583 10K
RN584 10K
RN585 10K
RN586 10K
RN587 10K
RN588 10K
RN589 10K
RN590 10K
RN591 10K
RN592 10K
RN593 10K
RN594 10K
RN595 10K
RN596 10K
RN597 10K
RN598 10K
RN599 10K
RN600 10K
RN601 10K
RN602 10K
RN603 10K
RN604 10K
RN605 10K
RN606 10K
RN607 10K
RN608 10K
RN609 10K
RN610 10K
RN611 10K
RN612 10K
RN613 10K
RN614 10K
RN615 10K
RN616 10K
RN617 10K
RN618 10K
RN619 10K
RN620 10K
RN621 10K
RN622 10K
RN623 10K
RN624 10K
RN625 10K
RN626 10K
RN627 10K
RN628 10K
RN629 10K
RN630 10K
RN631 10K
RN632 10K
RN633 10K
RN634 10K
RN635 10K
RN636 10K
RN637 10K
RN638 10K
RN639 10K
RN640 10K
RN641 10K
RN642 10K
RN643 10K
RN644 10K
RN645 10K
RN646 10K
RN647 10K
RN648 10K
RN649 10K
RN650 10K
RN651 10K
RN652 10K
RN653 10K
RN654 10K
RN655 10K
RN656 10K
RN657 10K
RN658 10K
RN659 10K
RN660 10K
RN661 10K
RN662 10K
RN663 10K
RN664 10K
RN665 10K
RN666 10K
RN667 10K
RN668 10K
RN669 10K
RN670 10K
RN671 10K
RN672 10K
RN673 10K
RN674 10K
RN675 10K
RN676 10K
RN677 10K
RN678 10K
RN679 10K
RN680 10K
RN681 10K
RN682 10K
RN683 10K
RN684 10K
RN685 10K
RN686 10K
RN687 10K
RN688 10K
RN689 10K
RN690 10K
RN691 10K
RN692 10K
RN693 10K
RN694 10K
RN695 10K
RN696 10K
RN697 10K
RN698 10K
RN699 10K
RN700 10K
RN701 10K
RN702 10K
RN703 10K
RN704 10K
RN705 10K
RN706 10K
RN707 10K
RN708 10K
RN709 10K
RN710 10K
RN711 10K
RN712 10K
RN713 10K
RN714 10K
RN715 10K
RN716 10K
RN717 10K
RN718 10K
RN719 10K
RN720 10K
RN721 10K
RN722 10K
RN723 10K
RN724 10K
RN725 10K
RN726 10K
RN727 10K
RN728 10K
RN729 10K
RN730 10K
RN731 10K
RN732 10K
RN733 10K
RN734 10K
RN735 10K
RN736 10K
RN737 10K
RN738 10K
RN739 10K
RN740 10K
RN741 10K
RN742 10K
RN743 10K
RN744 10K
RN745 10K
RN746 10K
RN747 10K
RN748 10K
RN749 10K
RN750 10K
RN751 10K
RN752 10K
RN753 10K
RN754 10K
RN755 10K
RN756 10K
RN757 10K
RN758 10K
RN759 10K
RN760 10K
RN761 10K
RN762 10K
RN763 10K
RN764 10K
RN765 10K
RN766 10K
RN767 10K
RN768 10K
RN769 10K
RN770 10K
RN771 10K
RN772 10K
RN773 10K
RN774 10K
RN775 10K
RN776 10K
RN777 10K
RN778 10K
RN779 10K
RN780 10K
RN781 10K
RN782 10K
RN783 10K
RN784 10K
RN785 10K
RN786 10K
RN787 10K
RN788 10K
RN789 10K
RN790 10K
RN791 10K
RN792 10K
RN793 10K
RN794 10K
RN795 10K
RN796 10K
RN797 10K
RN798 10K
RN799 10K
RN800 10K
RN801 10K
RN802 10K
RN803 10K
RN804 10K
RN805 10K
RN806 10K
RN807 10K
RN808 10K
RN809 10K
RN810 10K
RN811 10K
RN812 10K
RN813 10K
RN814 10K
RN815 10K
RN816 10K
RN817 10K
RN818 10K
RN819 10K
RN820 10K
RN821 10K
RN822 10K
RN823 10K
RN824 10K
RN825 10K
RN826 10K
RN827 10K
RN828 10K
RN829 10K
RN830 10K
RN831 10K
RN832 10K
RN833 10K
RN834 10K
RN835 10K
RN836 10K
RN837 10K
RN838 10K
RN839 10K
RN840 10K
RN841 10K
RN842 10K
RN843 10K
RN844 10K
RN845 10K
RN846 10K
RN847 10K
RN848 10K
RN849 10K
RN850 10K
RN851 10K
RN852 10K
RN853 10K
RN854 10K
RN855 10K
RN856 10K
RN857 10K
RN858 10K
RN859 10K
RN860 10K
RN861 10K
RN862 10K
RN863 10K
RN864 10K
RN865 10K
RN866 10K
RN867 10K
RN868 10K
RN869 10K
RN870 10K
RN871 10K
RN872 10K
RN873 10K
RN874 10K
RN875 10K
RN876 10K
RN877 10K
RN878 10K
RN879 10K
RN880 10K
RN881 10K
RN882 10K
RN883 10K
RN884 10K
RN885 10K
RN886 10K
RN887 10K
RN888 10K
RN889 10K
RN890 10K
RN891 10K
RN892 10K
RN893 10K
RN894 10K
RN895 10K
RN896 10K
RN897 10K
RN898 10K
RN899 10K
RN900 10K
RN901 10K
RN902 10K
RN903 10K
RN904 10K
RN905 10K
RN906 10K
RN907 10K
RN908 10K
RN909 10K
RN910 10K
RN911 10K
RN912 10K
RN913 10K
RN914 10K
RN915 10K
RN916 10K
RN917 10K
RN918 10K
RN919 10K
RN920 10K
RN921 10K
RN922 10K
RN923 10K
RN924 10K
RN925 10K
RN926 10K
RN927 10K
RN928 10K
RN929 10K
RN930 10K
RN931 10K
RN932 10K
RN933 10K
RN934 10K
RN935 10K
RN936 10K
RN937 10K
RN938 10K
RN939 10K
RN940 10K
RN941 10K
RN942 10K
RN943 10K
RN944 10K
RN945 10K
RN946 10K
RN947 10K
RN948 10K
RN949 10K
RN950 10K
RN951 10K
RN952 10K
RN953 10K
RN954 10K
RN955 10K
RN956 10K
RN957 10K
RN958 10K
RN959 10K
RN960 10K
RN961 10K
RN962 10K
RN963 10K
RN964 10K
RN965 10K
RN966 10K
RN967 10K
RN968 10K
RN969 10K
RN970 10K
RN971 10K
RN972 10K
RN973 10K
RN974 10K
RN975 10K
RN976 10K
RN977 10K
RN978 10K
RN979 10K
RN980 10K
RN981 10K
RN982 10K
RN983 10K
RN984 10K
RN985 10K
RN986 10K
RN987 10K
RN988 10K
RN989 10K
RN990 10K
RN991 10K
RN992 10K
RN993 10K
RN994 10K
RN995 10K
RN996 10K
RN997 10K
RN998 10K
RN999 10K
RN1000 10K
IC15
Propeller
Touch D0-7
Touch D8-15
Spare
Touch SPI x4
Touch control x4
Interprop SPI
Current limiting resistors in case both props set pins as outputs
RN1 1K
RN2 1K
RN3 1K

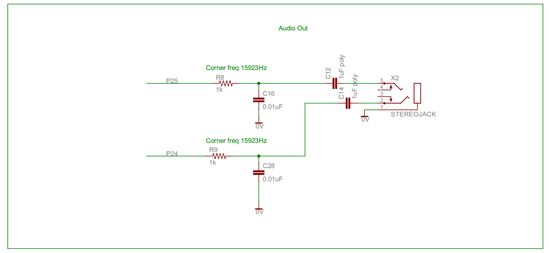
Audio Out
Corner freq 15923Hz
P25
R3
1k
C16
0.01uF
C12
0.1uF 50V
C11
0.1uF 50V
X2
STEREOJACK
Corner freq 15923Hz
P24
R6
1k
C28
0.01uF

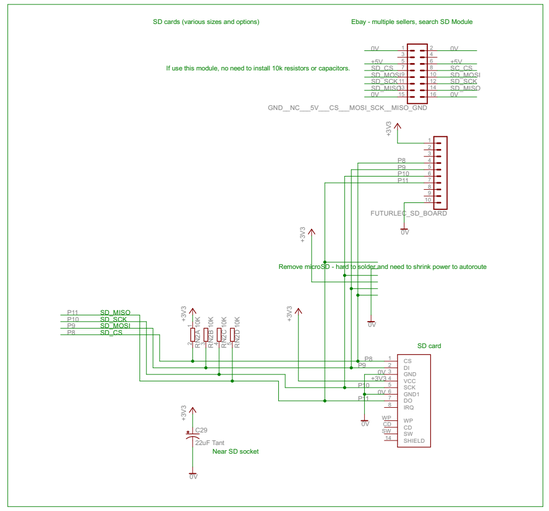
SD cards (various sizes and options)
Ebay - multiple sellers, search SD Module
If use this module, no need to install 10k resistors or capacitors.
GND__NC__5V__CS__MOSI_SCK__MISO_GND
FUTURLEC_SD_BOARD
Remove microSD - hard to solder and need to shrink power to autoroute
SD_MISO
SD_SCK
SD_MOSI
SD_CS
SD card
C29
22uF Tant
Near SD socket

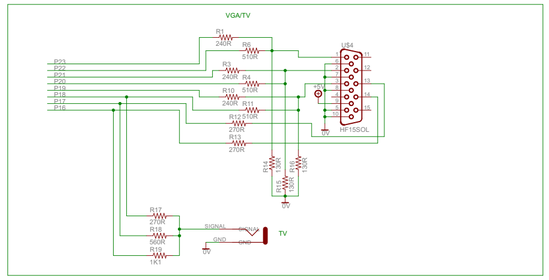
VGA/TV
HP15SOL
TV

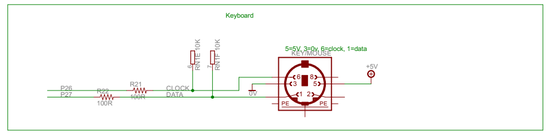
Keyboard
5=5V 3v3v Beclock, 1=data
KEYBOARD

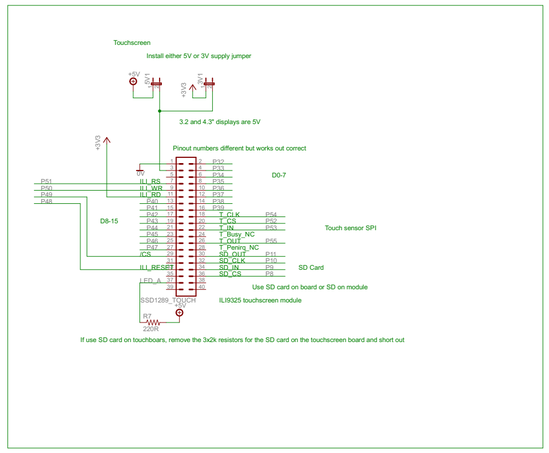
Touchscreen
Install either 5V or 3V supply jumper
3.2 and 4.3" displays are 5V
Pinout numbers different but works out correct
D0-7
D8-15
Touch sensor SPI
SD Card
Use SD card on board or SD on module
ILI9325 touchscreen module
If use SD card on touchboars, remove the 3x2k resistors for the SD card on the touchscreen board and short out

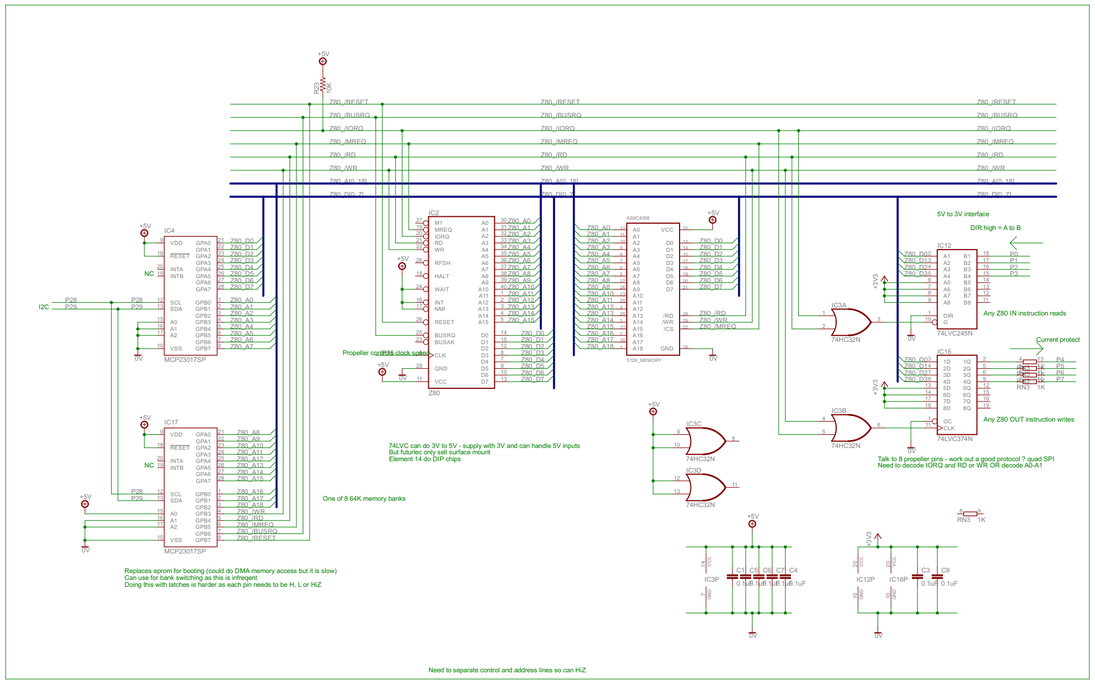
Z80_/RESET
Z80_/BUSRQ
Z80_/IORQ
Z80_/MREQ
Z80_/RD
Z80_/WR
Z80_A0_15
Z80_D0_7
IC4
MCP23017SP
IC17
MCP23017SP
IC2
Z80
IC5
S1UK_MEMORY
Propeller controls clock speed
5V to 3V interface
DIR high = A to B
IC12
74LVC245N
IC16
74LVC374N
Any Z80 IN instruction reads
Any Z80 OUT instruction writes
Current protect
74LVC can do 3V to 5V - supply with 3V and can handle 5V inputs
But futurlec only sell surface mount
Element 14 do DIP chips
One of 8 64K memory banks
Talk to 8 propeller pins - work out a good protocol ? quad SPI
Need to decode IORQ and RD or WR OR decode A0-A1
Replaces eprom for booting (could do DMA memory access but it is slow)
Can use for bank switching as this is infrequent
Doing this with latches is harder as each pin needs to be H, L or HiZ
Need to separate control and address lines so can HiZ