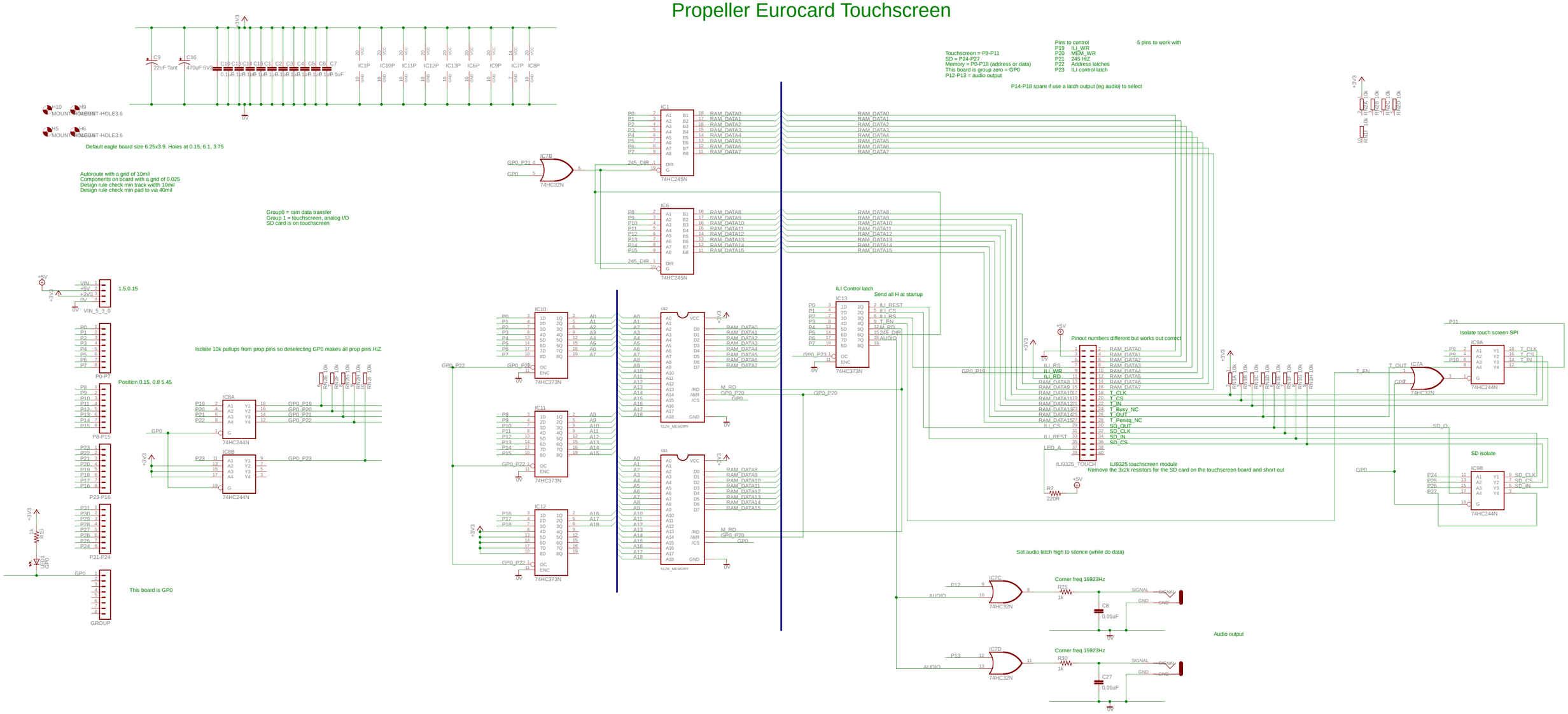Propeller Eurocard Touchscreen