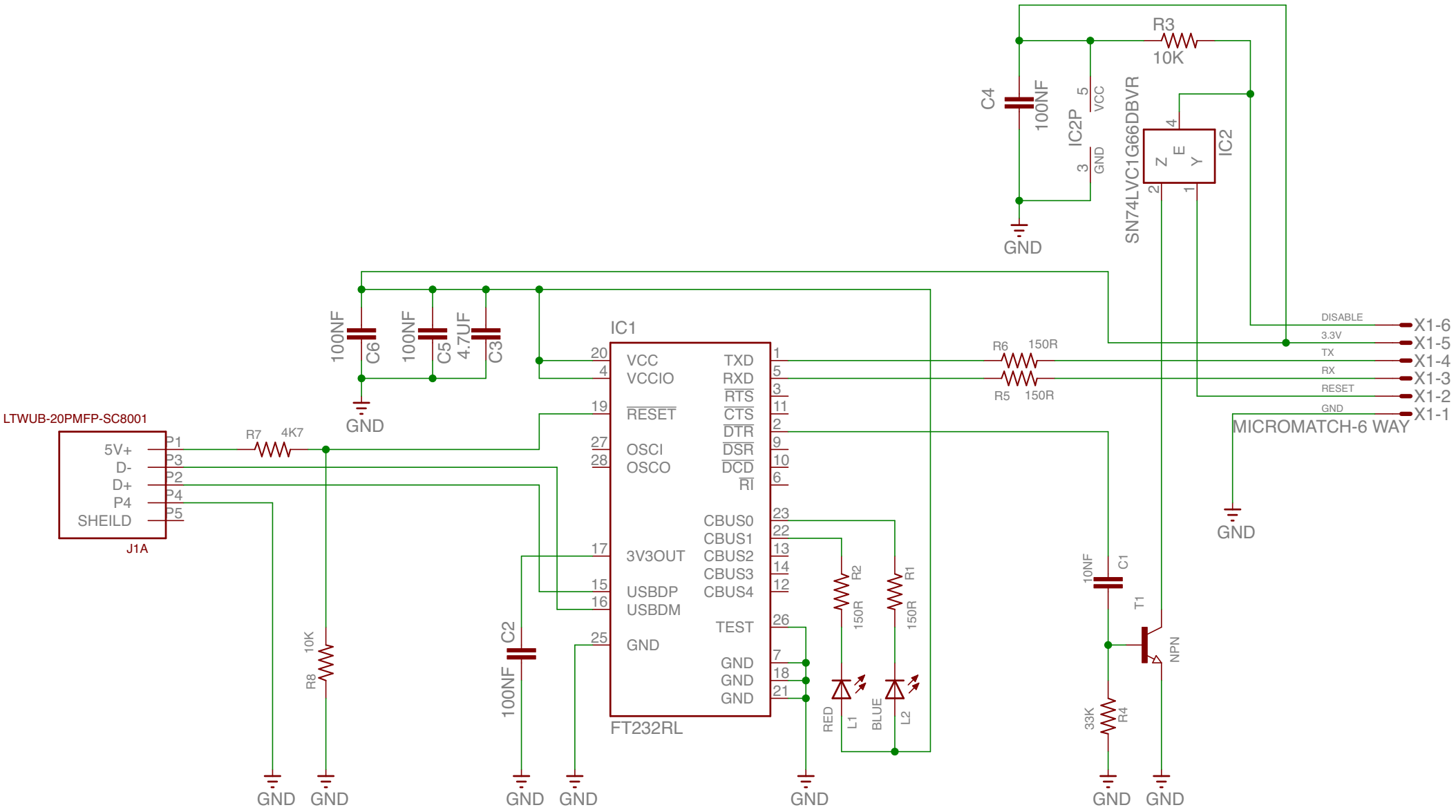
R3
10K
C4
100NF
IC2P
5
VCC
3
GND
SN74LVC1G66DBVR
4
Z
E
Y
IC2
2
1
GND
DISABLE
3.3V
TX
RX
RESET
GND
X1-6
X1-5
X1-4
X1-3
X1-2
X1-1
MICROMATCH-6 WAY
GND
100NF
C6
100NF
C5
4.7UF
C3
GND
IC1
VCC
VCCIO
RESET
OSCI
OSCO
3V3OUT
USBDP
USBDM
GND
TXD
RXD
RTS
CTS
DTR
DSR
DCD
RI
CBUS0
CBUS1
CBUS2
CBUS3
CBUS4
TEST
GND
GND
GND
FT232RL
R6
150R
R5
150R
LTWUB-20PMFP-SC8001
5V+
D-
D+
P4
SHEILD
P1
P3
P2
P4
P5
J1A
R7
4K7
R8
10K
C2
100NF
R2
150R
R1
150R
RED
L1
BLUE
L2
10NF
C1
T1
NPN
33K
R4
GND
GND
GND
GND
GND
GND
GND
GND