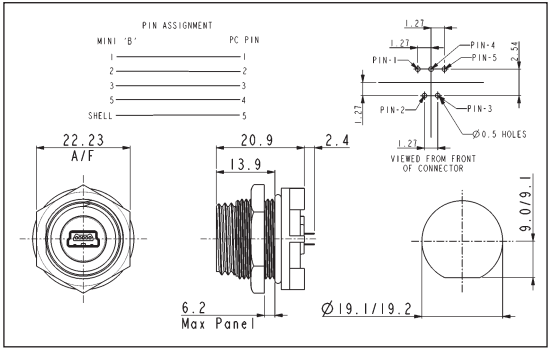- Mini 'B' type
- With pins for direct PC mounting
- Mates with PX0441 & PX0442 type cables