Propeller Demo
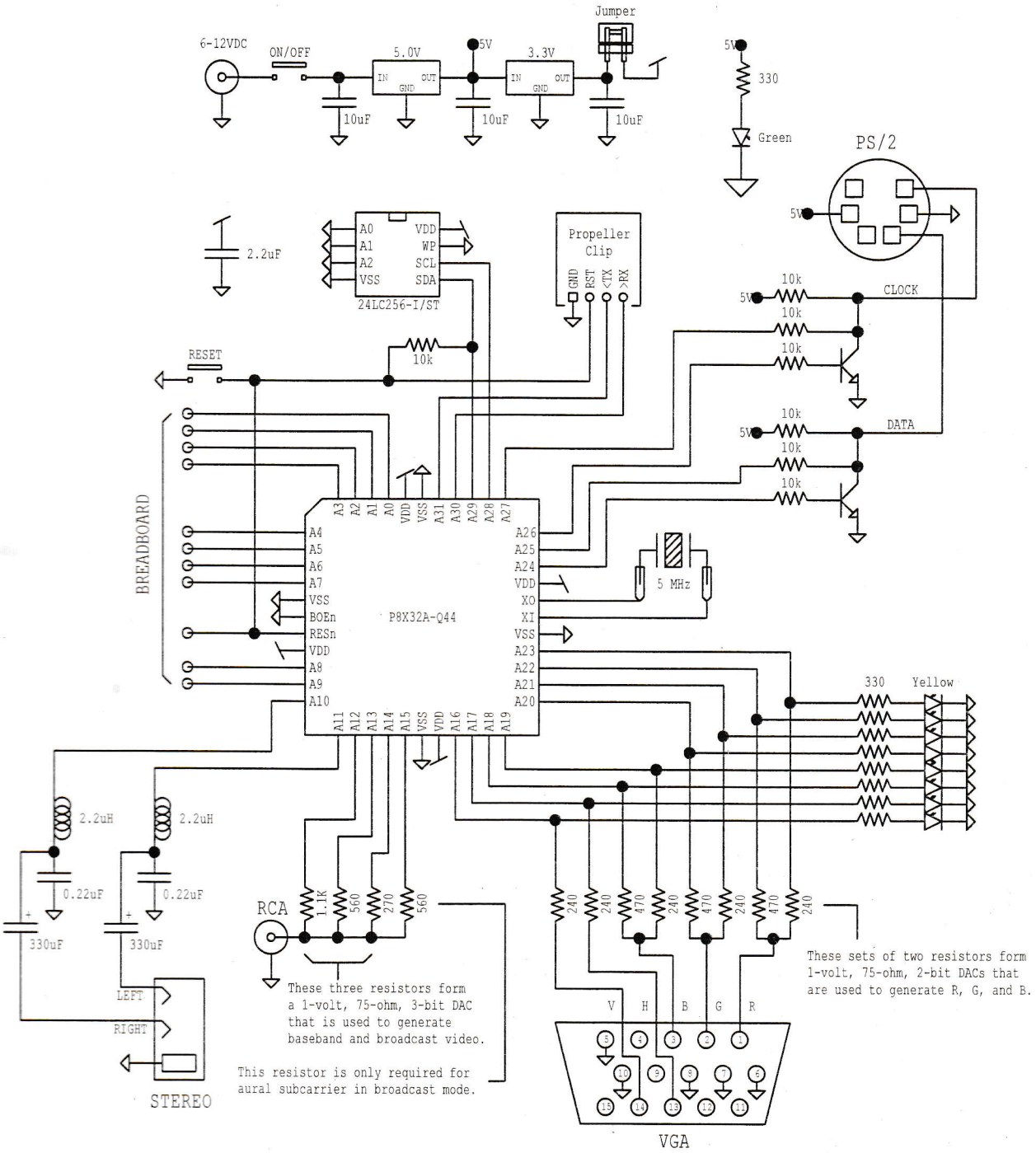
Schematic, Rev A