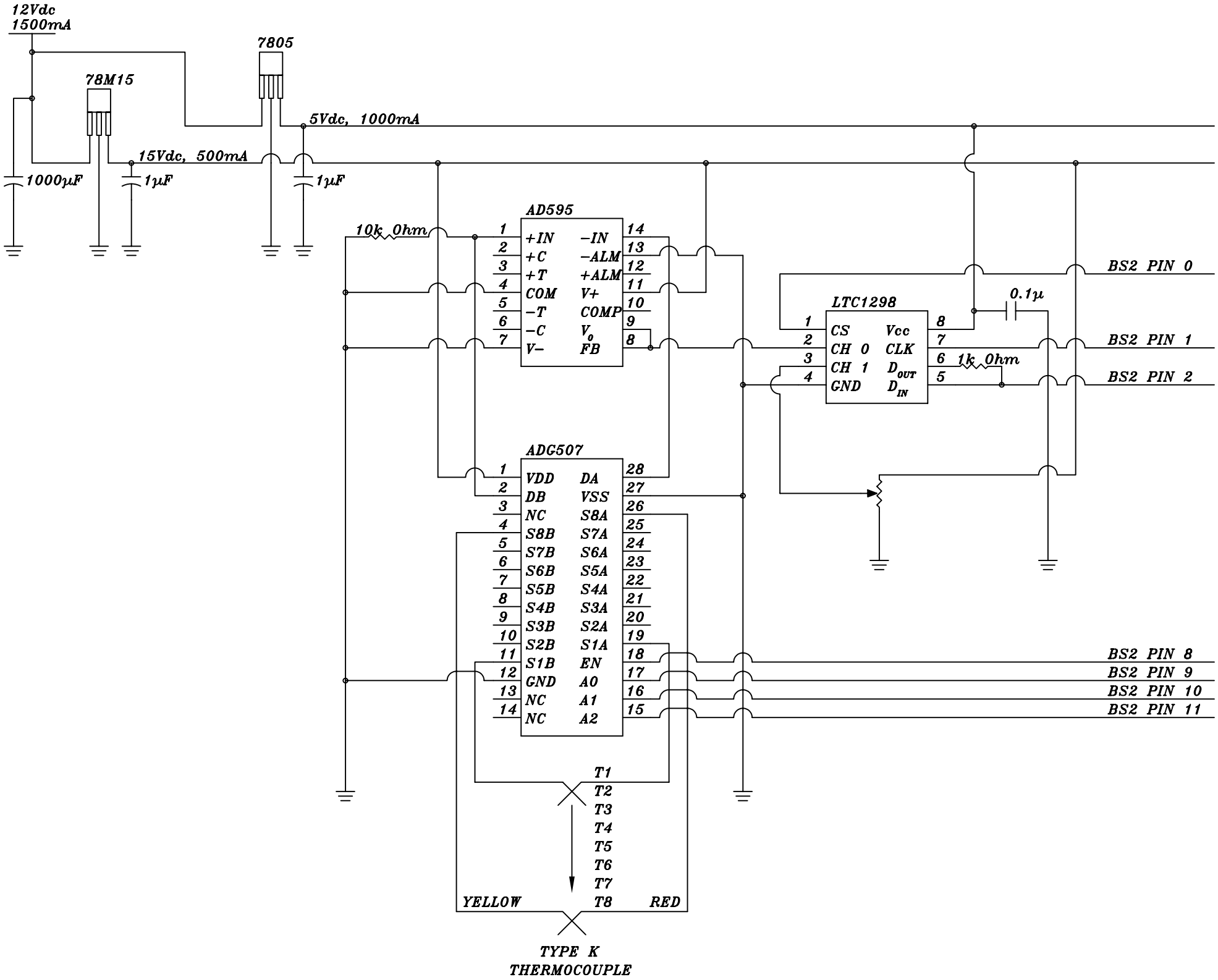
12Vdc
1500mA
7805
78M15
5Vdc, 1000mA
15Vdc, 500mA
1000µF
1µF
1µF
AD595
10k Ohm
+IN
+C
+T
COM
−T
−C
V−
−IN
−ALM
+ALM
V+
COMP
V_o
FB
LTC1298
CS
CH 0
CH 1
GND
Vcc
CLK
D_{OUT}
D_{IN}
0.1µ
1k Ohm
BS2 PIN 0
BS2 PIN 1
BS2 PIN 2
ADG507
VDD
DB
NC
S8B
S7B
S6B
S5B
S4B
S3B
S2B
S1B
GND
NC
NC
DA
VSS
S8A
S7A
S6A
S5A
S4A
S3A
S2A
S1A
EN
A0
A1
A2
BS2 PIN 8
BS2 PIN 9
BS2 PIN 10
BS2 PIN 11
T1
T2
T3
T4
T5
T6
T7
T8
YELLOW
RED
TYPE K
THERMOCOUPLE