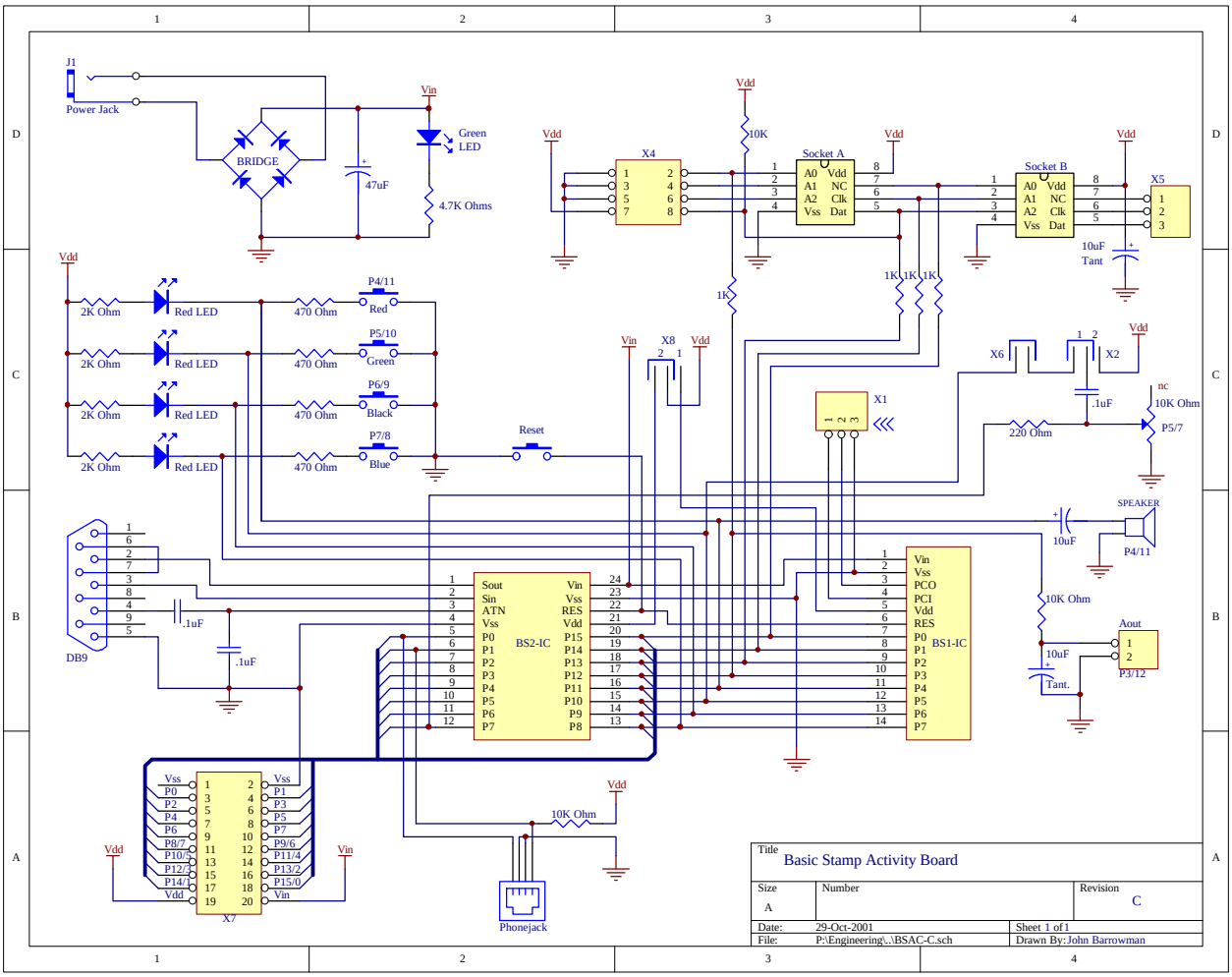
J1
Power Jack
BRIDGE
47uF
Vin
Green LED
4.7K Ohms
Vdd
X4
10K
Socket A
Socket B
A0 Vdd
A1 NC
A2 Clk
Vss Dat
X5
10uF Tant
1K
1K 1K 1K
2K Ohm
Red LED
470 Ohm
P4/11 Red
P5/10 Green
P6/9 Black
P7/8 Blue
Reset
X8
X6
X2
.1uF
nc
10K Ohm
P5/7
220 Ohm
X1
SPEAKER
10uF
P4/11
DB9
.1uF
.1uF
BS2-IC
Sout
Sin
ATN
Vss
P0
P1
P2
P3
P4
P5
P6
P7
Vin
Vss
RES
Vdd
P15
P14
P13
P12
P11
P10
P9
P8
BS1-IC
Vin
Vss
PCO
PCI
Vdd
RES
P0
P1
P2
P3
P4
P5
P6
P7
10K Ohm
Aout
P3/12
10uF
Tant.
X7
Vss
P0
P2
P4
P6
P8/7
P10/5
P12/3
P14/1
Vdd
P1
P3
P5
P7
P9/6
P11/4
P13/2
P15/0
Vin
10K Ohm
Phonejack
Title
Basic Stamp Activity Board
Size
A
Number
Revision
C
Date: 29-Oct-2001
Sheet 1 of 1
File: P:\Engineering\..\BSAC-C.sch
Drawn By: John Barrowman