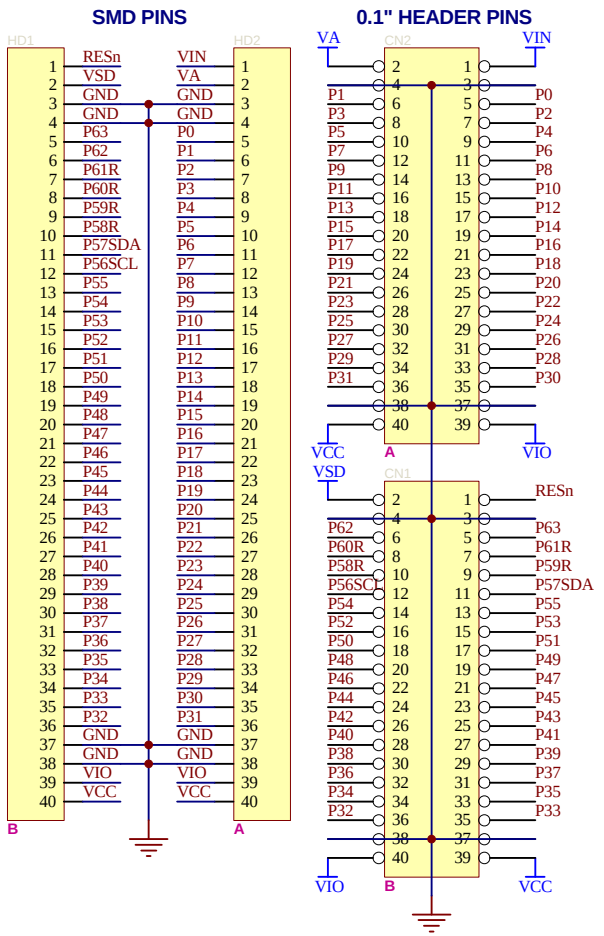

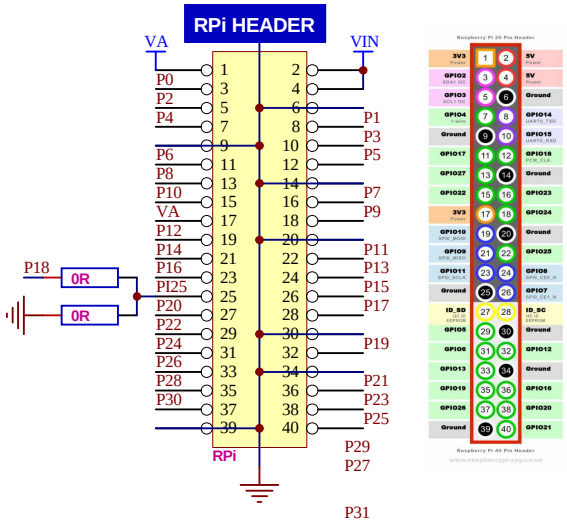

pbjtech.com BRISBANE, AUSTRALIA	P2D2 HEADERS		*P2D2 HEADER PINOUTS*					
	FILE:	P2PINS.Sch	Ver 1 .0	1 of 1	*3*	18-Jul-2020	12:32:10	DWN PBJ