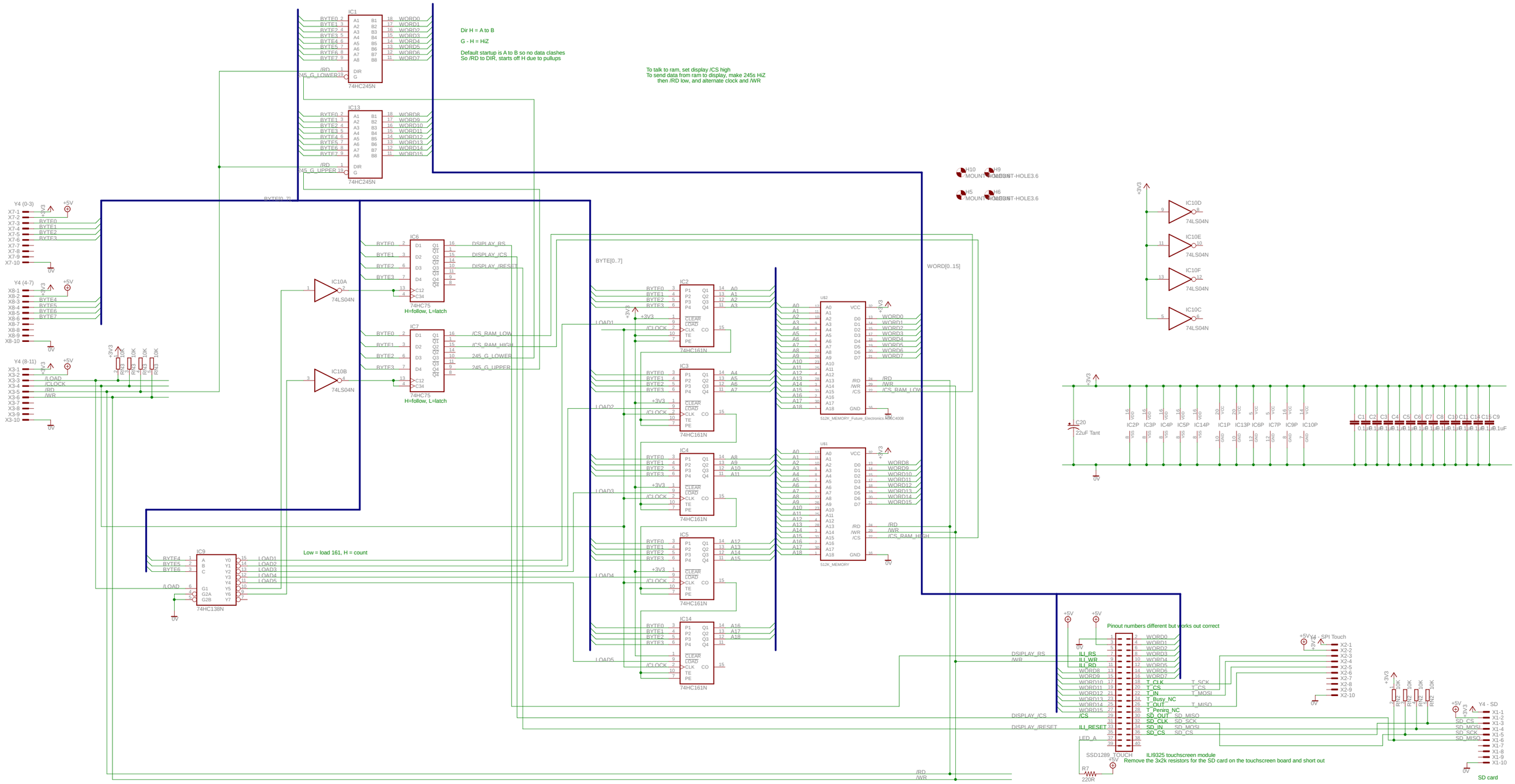

20/02/2013 10:40:27 PM f=0.59 C:\Program Files\EAGLE-5.0.0\projects\Propeller Centimanes Touchscreen v2\CentimanesTouch.sch (Sheet: 1/1)