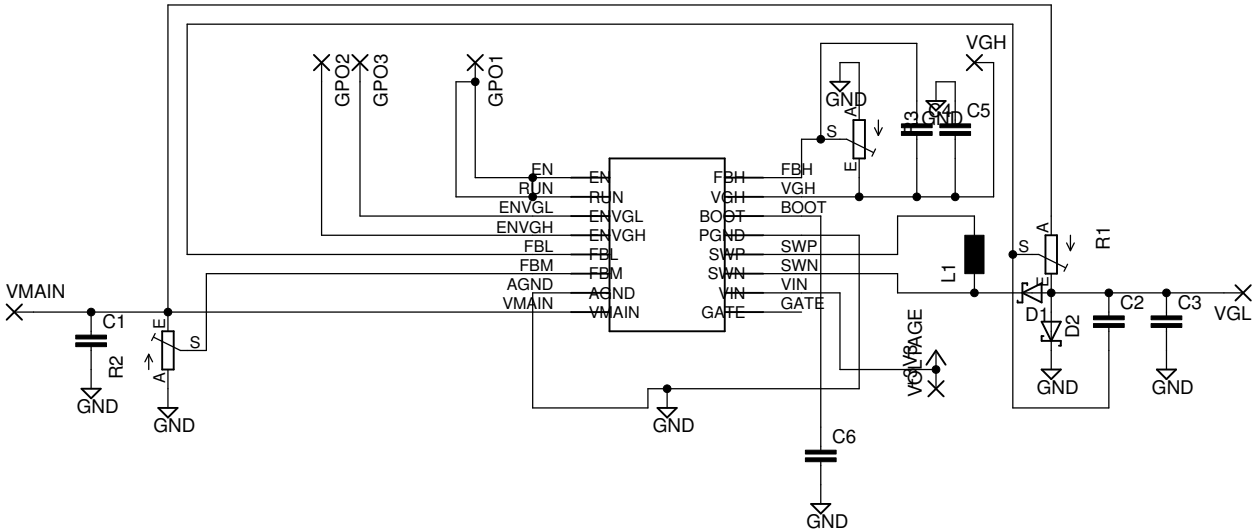
VMAIN
C1
R2
GND
GND
GPO2
GPO3
GPO1
EN
RUN
ENVGL
ENVGH
FBL
FBM
AGND
VMAIN
EN
RUN
ENVGL
ENVGH
FBL
FBM
AGND
VMAIN
FBH
VGH
BOOT
PGND
SWP
SWN
VIN
GATE
FBH
VGH
BOOT
SWP
SWN
VIN
GATE
GND
GND
GND
C6
GND
VGH
C4
C5
L1
R1
D1
D2
C2
C3
VGL
GND
GND
VOLTAGE