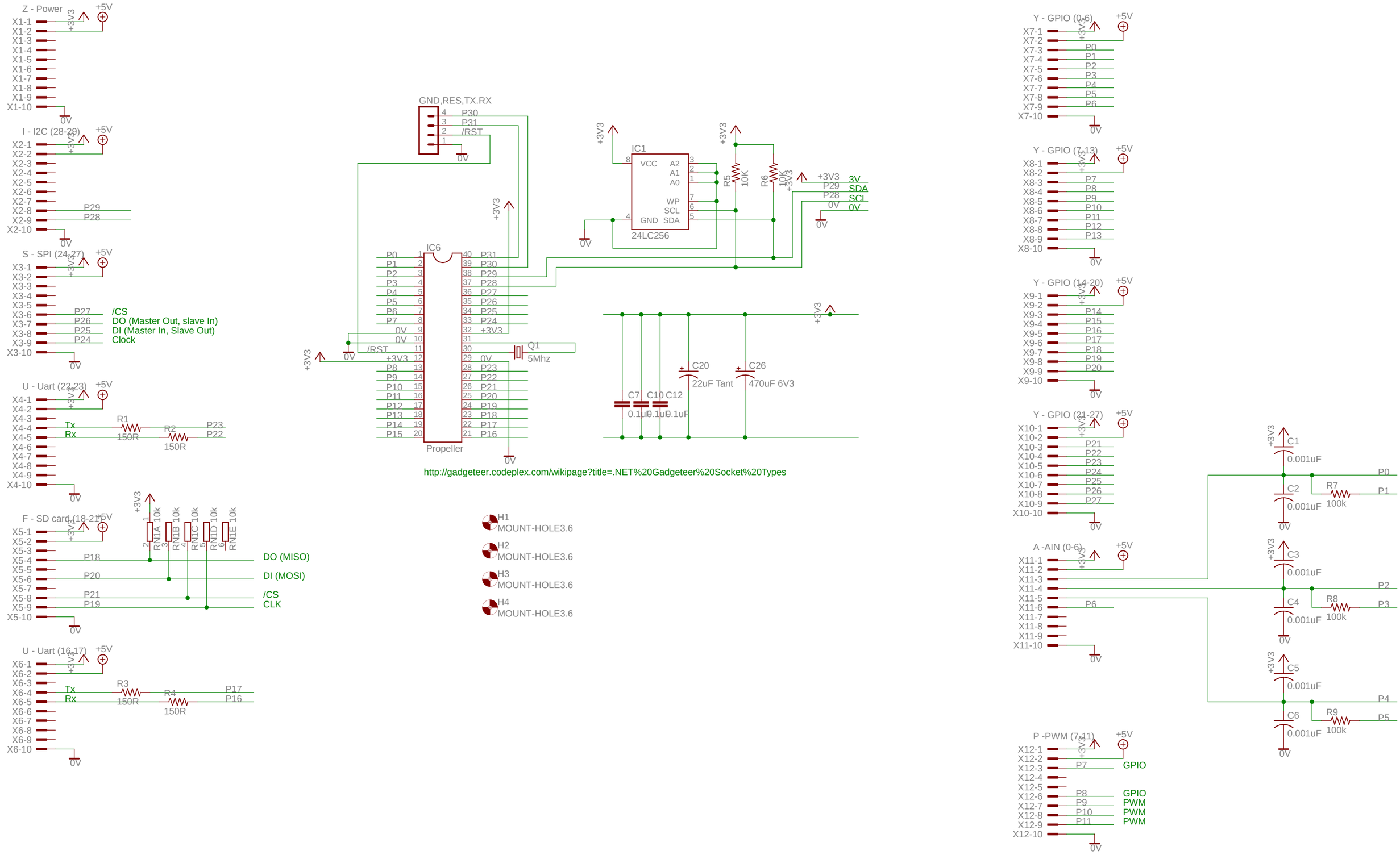

http://gadgeteer.codeplex.com/wikipage?title=.NET%20Gadgeteer%20Socket%20Types