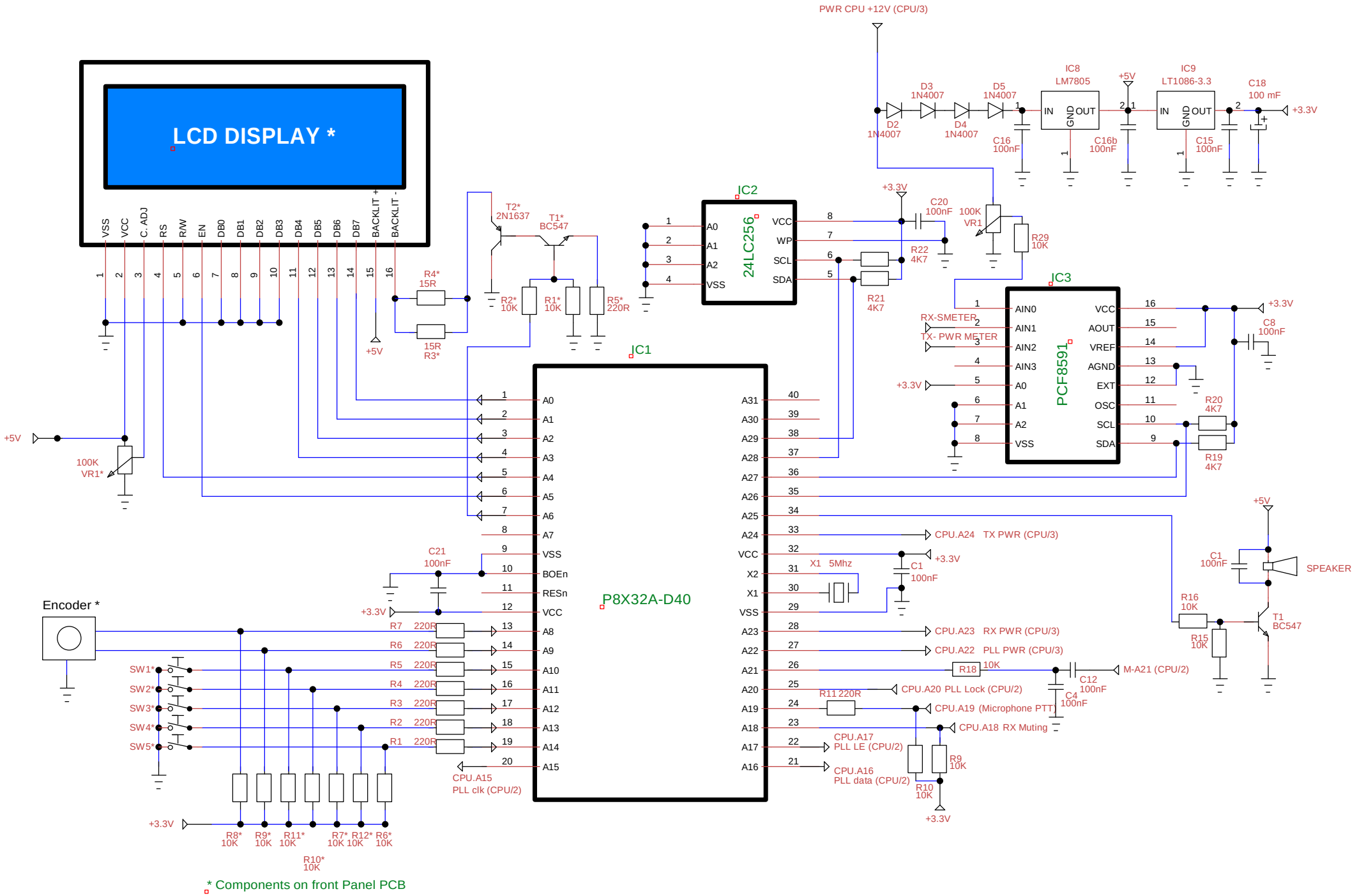
LCD DISPLAY *
VSS
VCC
C. ADJ
RS
R/W
EN
DB0
DB1
DB2
DB3
DB4
DB5
DB6
DB7
BACKLIT +
BACKLIT -
PWR CPU +12V (CPU/3)
IC8
LM7805
IC9
LT1086-3.3
D2 1N4007
D3 1N4007
D4 1N4007
D5 1N4007
C16 100nF
C16b 100nF
C15 100nF
C18 100 mF
+3.3V
+5V
T2* 2N1637
T1* BC547
R4* 15R
15R R3*
R2* 10K
R1* 10K
R5* 220R
IC2
24LC256
A0
A1
A2
VSS
VCC
WP
SCL
SDA
C20 100nF
100K VR1
R29 10K
R22 4K7
R21 4K7
IC3
PCF8591
AIN0
AIN1
AIN2
AIN3
A0
A1
A2
VSS
VCC
AOUT
VREF
AGND
EXT
OSC
SCL
SDA
RX-SMETER
TX- PWR METER
C8 100nF
R20 4K7
R19 4K7
IC1
P8X32A-D40
A0
A1
A2
A3
A4
A5
A6
A7
VSS
BOEn
RESn
VCC
A8
A9
A10
A11
A12
A13
A14
A15
A31
A30
A29
A28
A27
A26
A25
A24
VCC
X2
X1
VSS
A23
A22
A21
A20
A19
A18
A17
A16
C21 100nF
CPU.A15 PLL clk (CPU/2)
CPU.A24 TX PWR (CPU/3)
X1 5Mhz
C1 100nF
CPU.A23 RX PWR (CPU/3)
CPU.A22 PLL PWR (CPU/3)
R18 10K
M-A21 (CPU/2)
C12 100nF
C4 100nF
CPU.A20 PLL Lock (CPU/2)
R11 220R
CPU.A19 (Microphone PTT)
CPU.A18 RX Muting
CPU.A17 PLL LE (CPU/2)
CPU.A16 PLL data (CPU/2)
R9 10K
R10 10K
R16 10K
R15 10K
T1 BC547
SPEAKER
Encoder *
SW1*
SW2*
SW3*
SW4*
SW5*
R7 220R
R6 220R
R5 220R
R4 220R
R3 220R
R2 220R
R1 220R
R8* 10K
R9* 10K
R11* 10K
R7* 10K
R12* 10K
R6* 10K
R10* 10K
100K VR1*
* Components on front Panel PCB