Propeller Eurocard Touchscreen 161

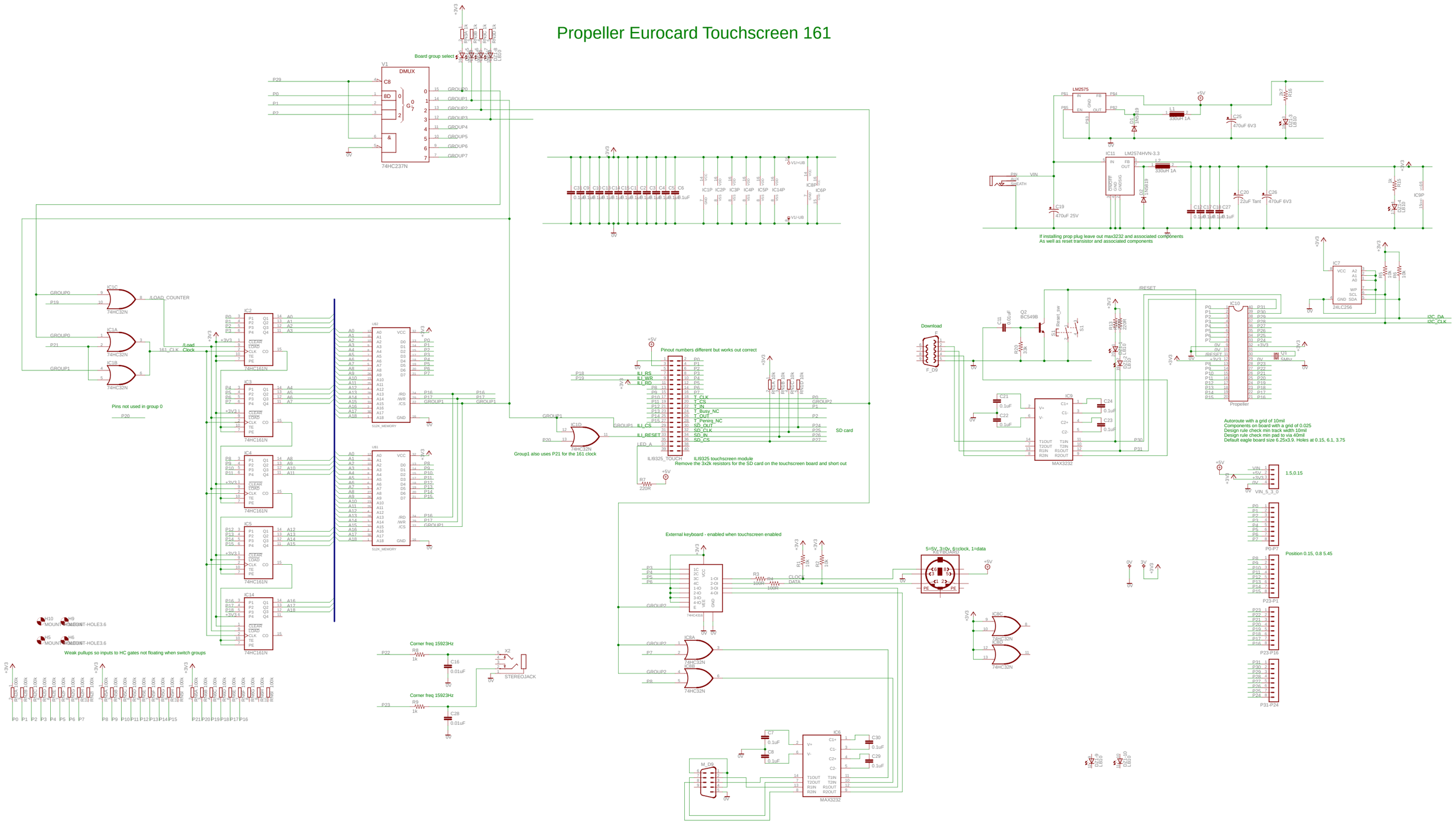

15/04/2012 12:12:35 PM f=0.51 C:\Program Files\EAGLE-5.0.0\projects\Propeller Eurocard Touchscreen 161 237 v2\Propeller_Touchscreen_161_237v2.sch (Sheet: 1/1)