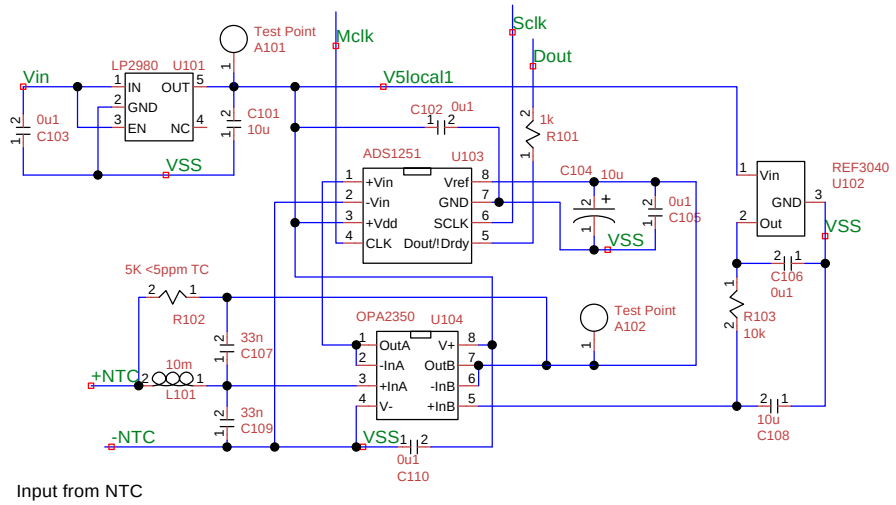

NTC measurement circuit

Title		
Author		
File Seed Laser control\Thermistor Measurement.dsn		Document
Revision 1.0	Date	Sheets 1 of 1