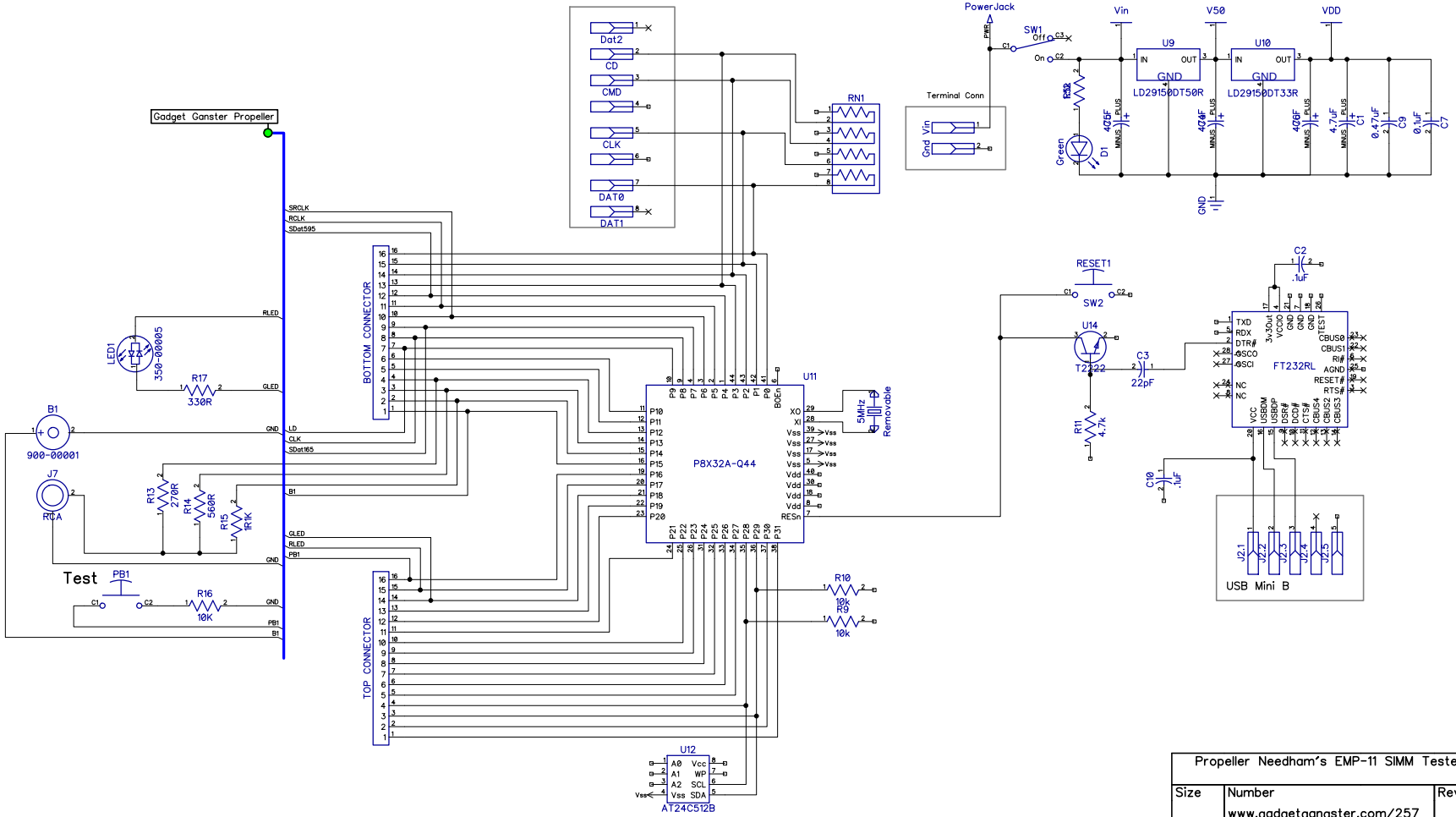

Propeller Needham's EMP-11 SIMM Tester		
Size	Number www.gadgetgangster.com/257	Rev
Date: 01/15/2012	Drawn by: Bruce E	
Propeller EMP-11 SIMM Tester.sch	Sheet 1 of 1	