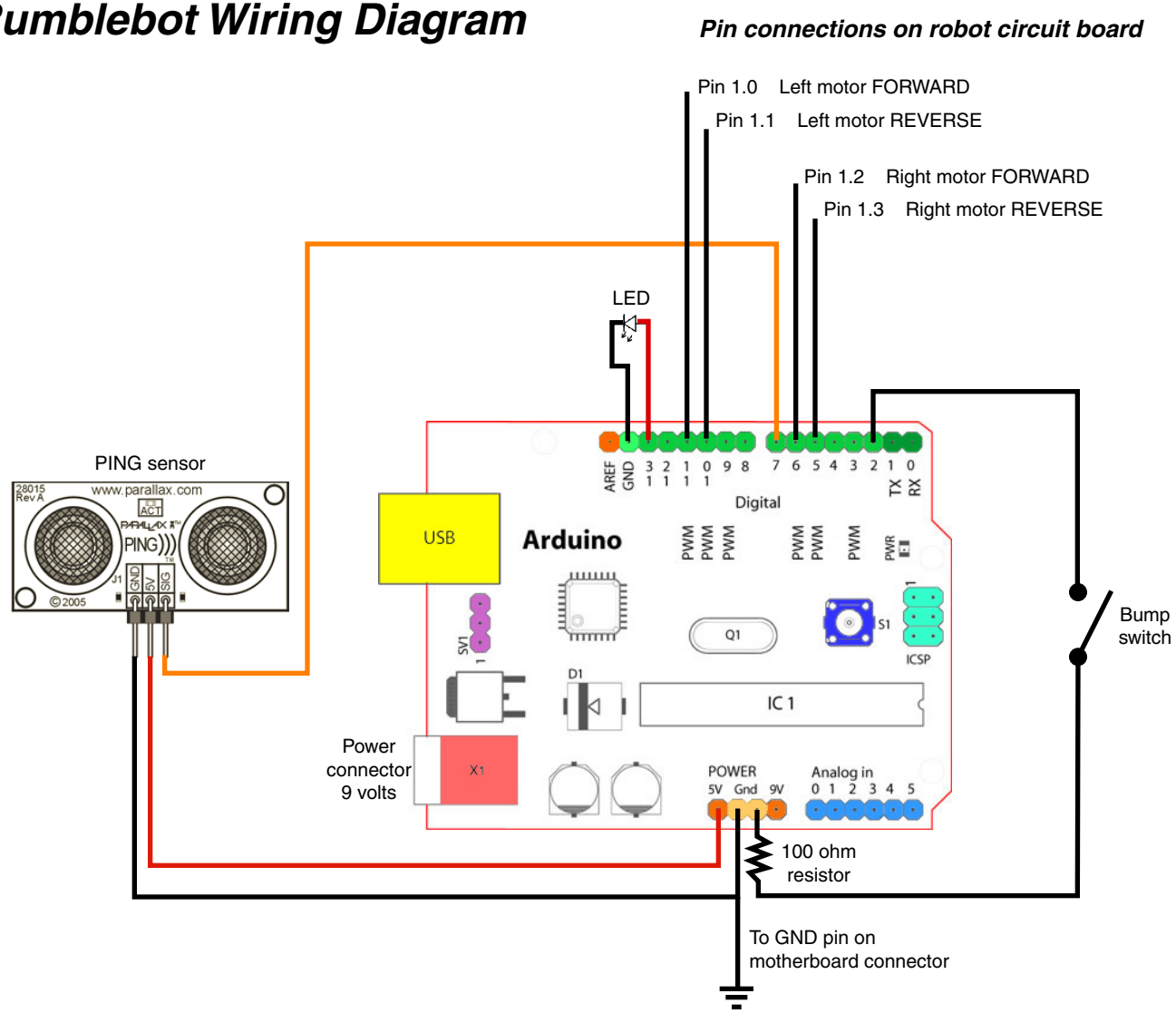Rumblebot Wiring Diagram