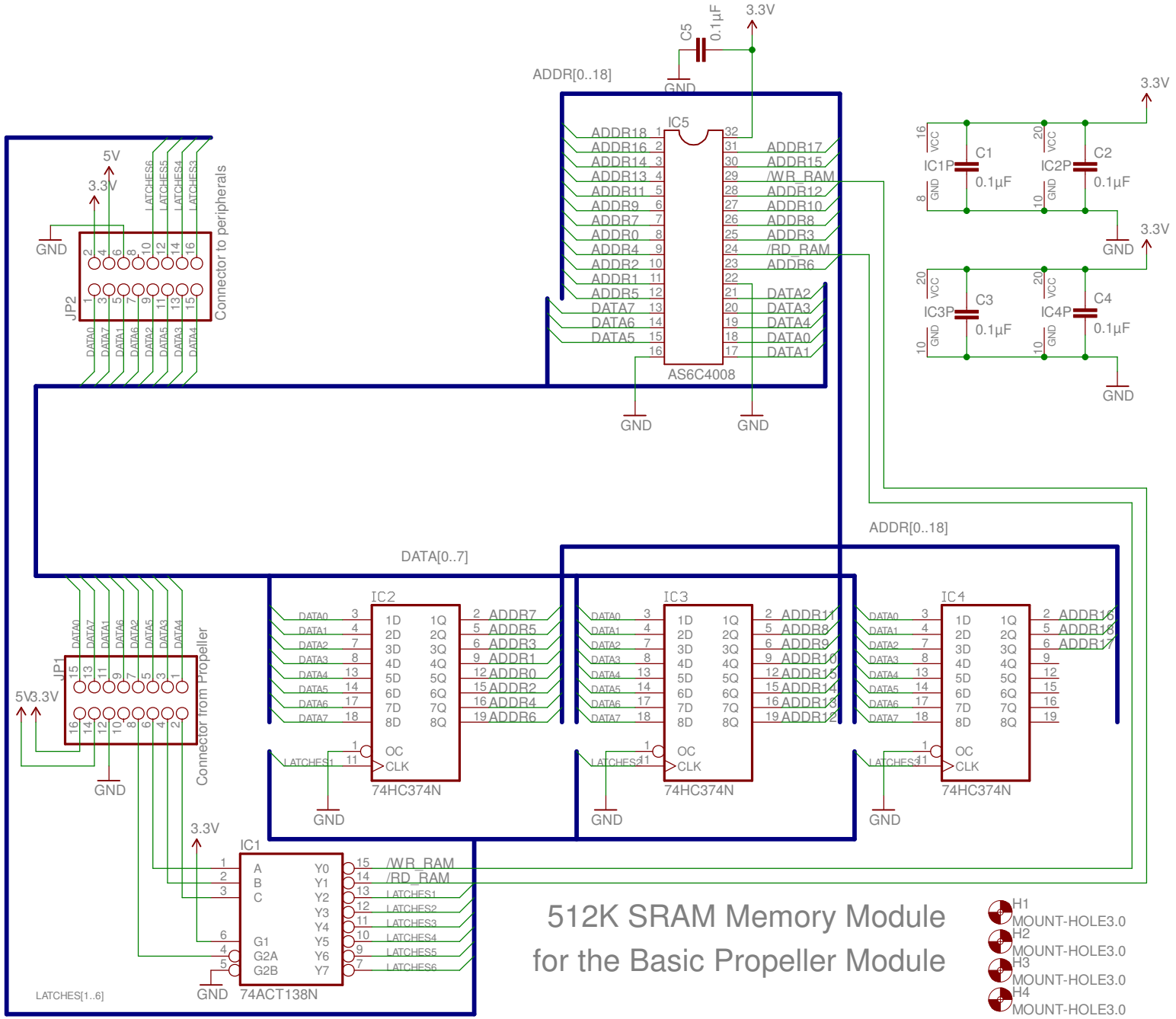
ADDR[0..18]
C5
0.1µF
3.3V
GND
IC5
AS6C4008
ADDR18
ADDR16
ADDR14
ADDR13
ADDR11
ADDR9
ADDR7
ADDR0
ADDR4
ADDR2
ADDR1
ADDR5
DATA7
DATA6
DATA5
ADDR17
ADDR15
/WR_RAM
ADDR12
ADDR10
ADDR8
ADDR3
/RD_RAM
ADDR6
DATA2
DATA3
DATA4
DATA0
DATA1
C1
IC1P
0.1µF
C2
IC2P
0.1µF
C3
IC3P
0.1µF
C4
IC4P
0.1µF
VCC
GND
5V
3.3V
JP2
Connector to peripherals
LATCHES6
LATCHES5
LATCHES4
LATCHES3
DATA0
DATA7
DATA1
DATA6
DATA2
DATA5
DATA3
DATA4
DATA[0..7]
ADDR[0..18]
IC2
IC3
IC4
74HC374N
1D
2D
3D
4D
5D
6D
7D
8D
1Q
2Q
3Q
4Q
5Q
6Q
7Q
8Q
OC
CLK
LATCHES1
LATCHES2
LATCHES3
JP1
Connector from Propeller
5V3.3V
IC1
74ACT138N
A
B
C
G1
G2A
G2B
Y0
Y1
Y2
Y3
Y4
Y5
Y6
Y7
/WR_RAM
/RD_RAM
LATCHES1
LATCHES2
LATCHES3
LATCHES4
LATCHES5
LATCHES6
LATCHES[1..6]
512K SRAM Memory Module
for the Basic Propeller Module
H1
MOUNT-HOLE3.0
H2
MOUNT-HOLE3.0
H3
MOUNT-HOLE3.0
H4
MOUNT-HOLE3.0