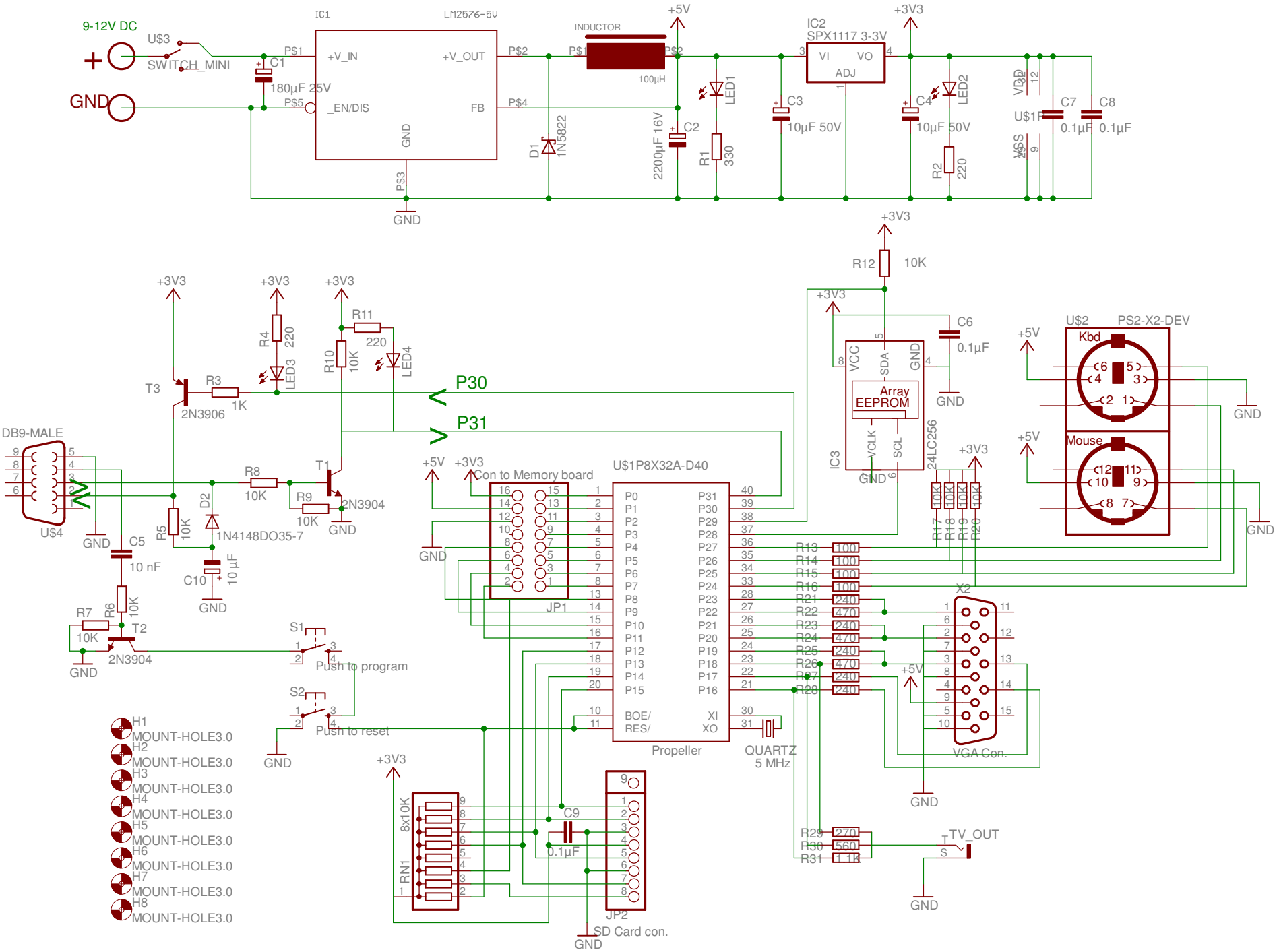
9-12V DC
U$3
SWITCH_MINI
GND
IC1
LM2576-5V
+V_IN
+V_OUT
_EN/DIS
FB
GND
C1
180µF 25V
P$1
P$2
P$3
P$4
P$5
INDUCTOR
100µH
D1
1N5822
2200µF 16V
C2
LED1
R1
330
+5V
IC2
SPX1117 3-3V
VI
VO
ADJ
+3V3
C3
10µF 50V
C4
10µF 50V
LED2
R2
220
VDD
VSS
U$1
C7
0.1µF
C8
0.1µF
R12
10K
R4
220
LED3
R10
10K
R11
220
LED4
T3
2N3906
R3
1K
P30
P31
DB9-MALE
U$4
R5
10K
D2
1N4148DO35-7
R8
10K
R9
10K
T1
2N3904
C5
10 nF
C10
10 µF
R7
10K
R6
10K
T2
2N3904
S1
Push to program
S2
Push to reset
Con to Memory board
JP1
U$1P8X32A-D40
Propeller
QUARTZ
5 MHz
BOE/
RES/
XI
XO
C6
0.1µF
IC3
24LC256
VCC
SDA
GND
VCLK
SCL
Array
EEPROM
R17
10K
R18
10K
R19
10K
R20
10K
U$2
PS2-X2-DEV
Kbd
Mouse
R13
100
R14
100
R15
100
R16
100
R21
240
R22
470
R23
240
R24
470
R25
240
R26
470
R27
240
R28
240
X2
VGA Con.
R29
270
R30
560
R31
1.1k
TV_OUT
T
S
H1
MOUNT-HOLE3.0
H2
MOUNT-HOLE3.0
H3
MOUNT-HOLE3.0
H4
MOUNT-HOLE3.0
H5
MOUNT-HOLE3.0
H6
MOUNT-HOLE3.0
H7
MOUNT-HOLE3.0
H8
MOUNT-HOLE3.0
RN1
8x10K
C9
0.1µF
JP2
SD Card con.