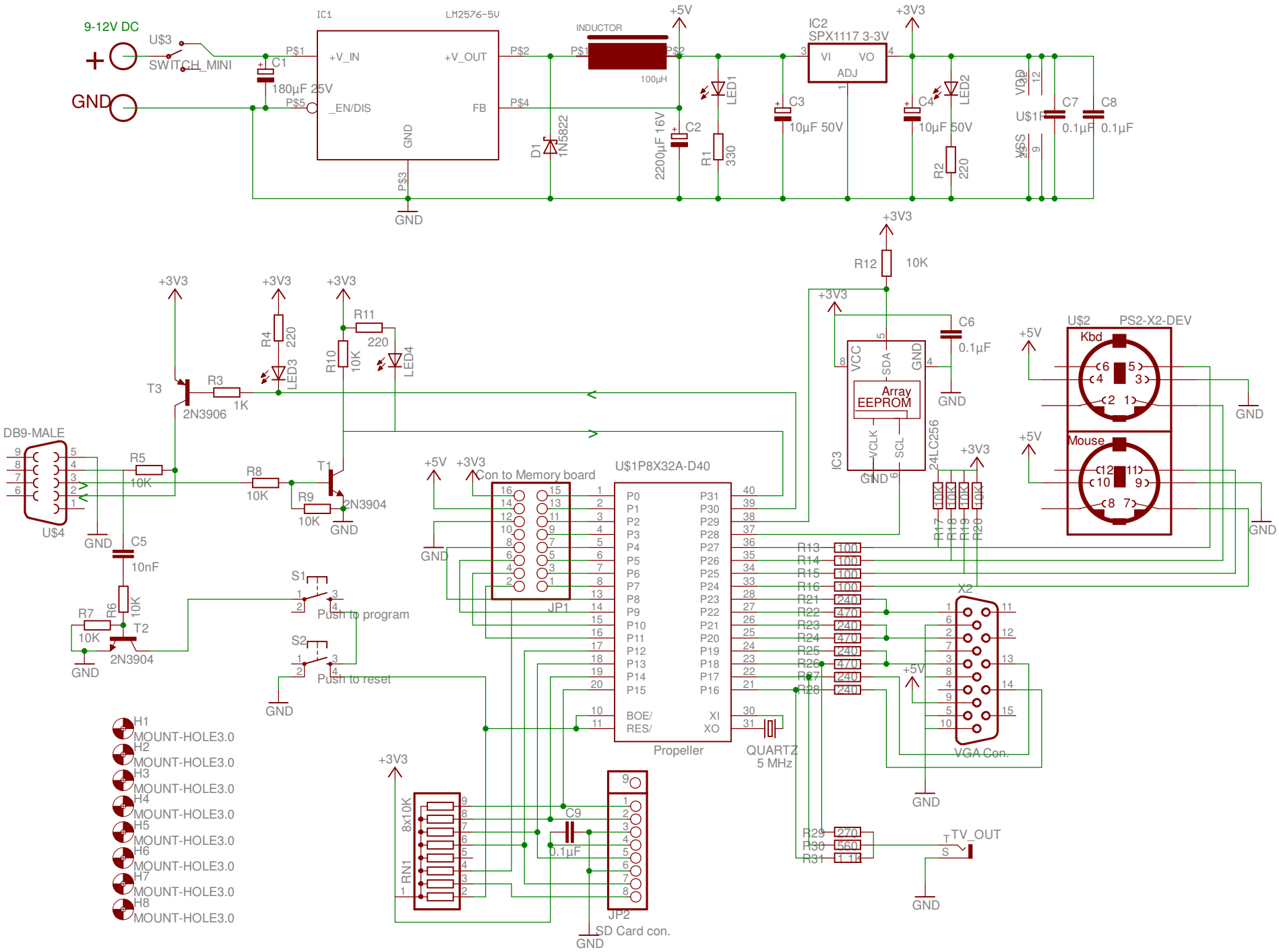
9-12V DC
GND
U$3
SWITCH_MINI
C1
180µF 25V
IC1
LM2576-5V
+V_IN
+V_OUT
_EN/DIS
FB
GND
P$1
P$2
P$3
P$4
P$5
INDUCTOR
100µH
+5V
D1
1N5822
C2
2200µF 16V
LED1
R1
330
IC2
SPX1117 3-3V
VI
VO
ADJ
+3V3
C3
10µF 50V
C4
10µF 50V
LED2
R2
220
VDD
VSS
U$1
C7
0.1µF
C8
0.1µF
R12
10K
R4
220
LED3
R10
10K
R11
220
LED4
T3
2N3906
R3
1K
DB9-MALE
U$4
R5
10K
R8
10K
T1
2N3904
R9
10K
C5
10nF
R6
10K
R7
10K
T2
2N3904
S1
Push to program
S2
Push to reset
Con to Memory board
JP1
U$1P8X32A-D40
Propeller
QUARTZ
5 MHz
C6
0.1µF
VCC
SDA
SCL
VCLK
Array
EEPROM
IC3
24LC256
R17
R18
R19
R20
10K
U$2
PS2-X2-DEV
Kbd
Mouse
R13
R14
R15
R16
R21
R22
R23
R24
R25
R26
R27
R28
100
240
470
X2
VGA Con.
R29
R30
R31
270
560
1.1K
TV_OUT
T
S
RN1
8x10K
C9
0.1µF
JP2
SD Card con.
H1
H2
H3
H4
H5
H6
H7
H8
MOUNT-HOLE3.0