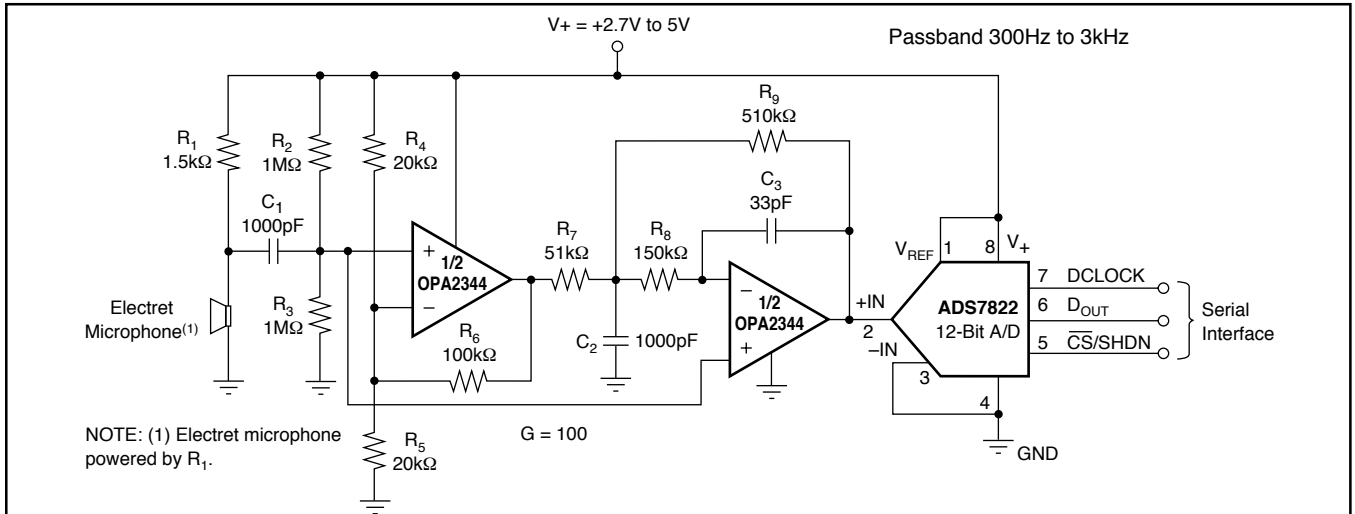

FIGURE 7. Speech Bandpass Filtered Data Acquisition System.