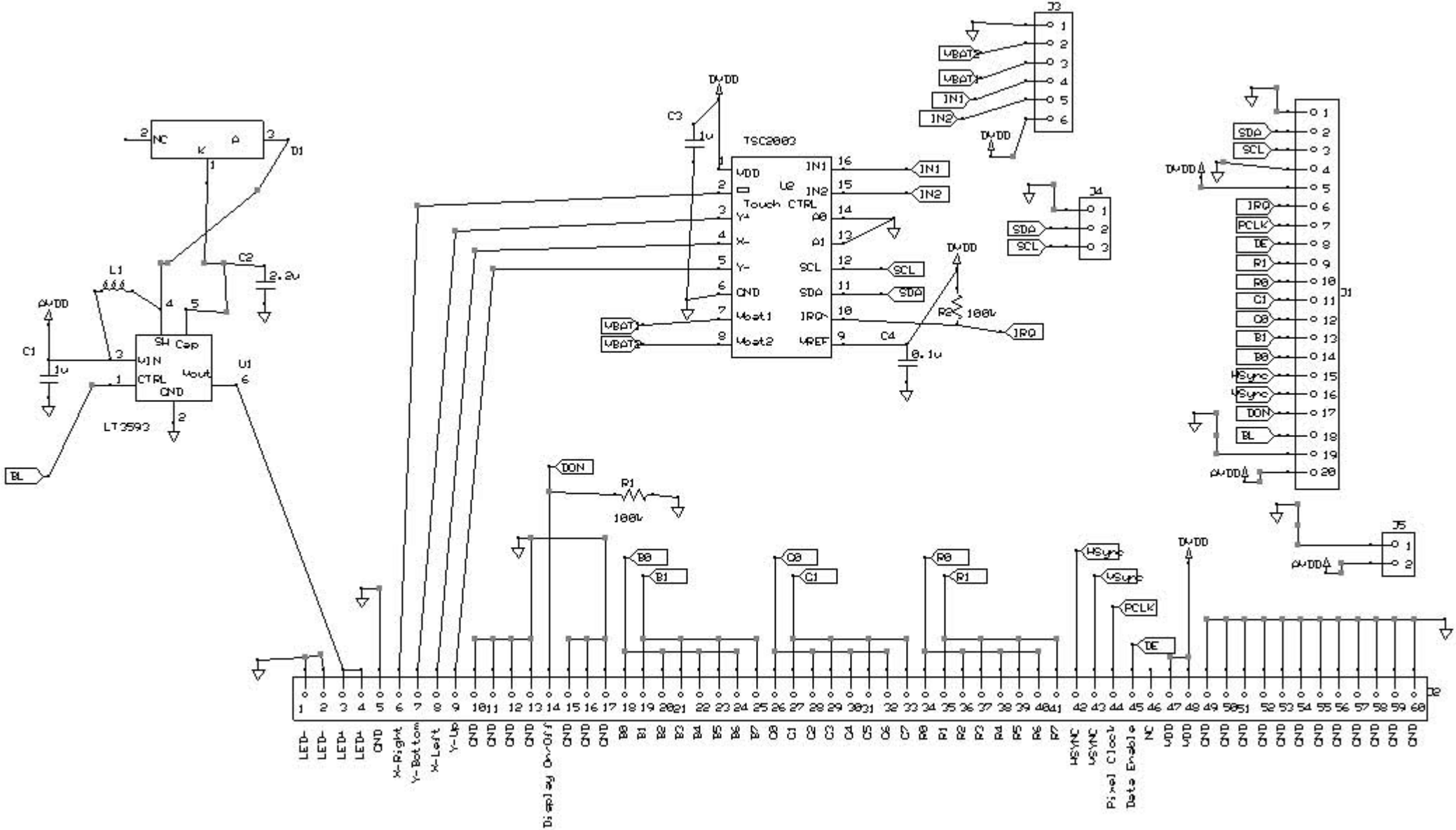

TSC2003
U2
Touch CTRL
LT3593
SH Cap
VIN
CTRL
GND
Vout
U1
D1
L1
C1
C2
C3
C4
R1
R2
100k
J1
J2
J3
J4
J5
AVDD
DVDD
BL
DON
IN1
IN2
SCL
SDA
IRQ
PCLK
DE
R0
R1
R2
R3
R4
R5
R6
R7
G0
G1
B0
B1
HSync
VSync
LED-
LED+
GND
X-Right
Y-Bottom
X-Left
Y-Up
Display On-Off
Pixel Clock
Data Enable
NC
VDD