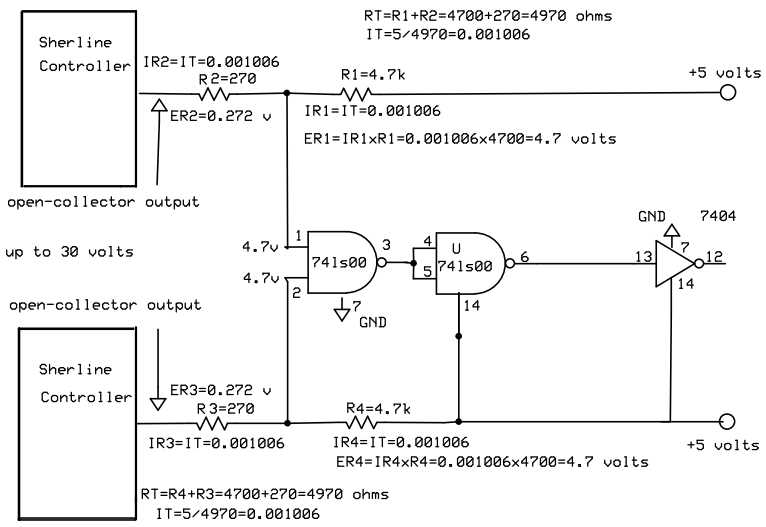

Company Name		
Schematic Name		
Designer's name	Rev 1.0 17/04/2010	Page # or name