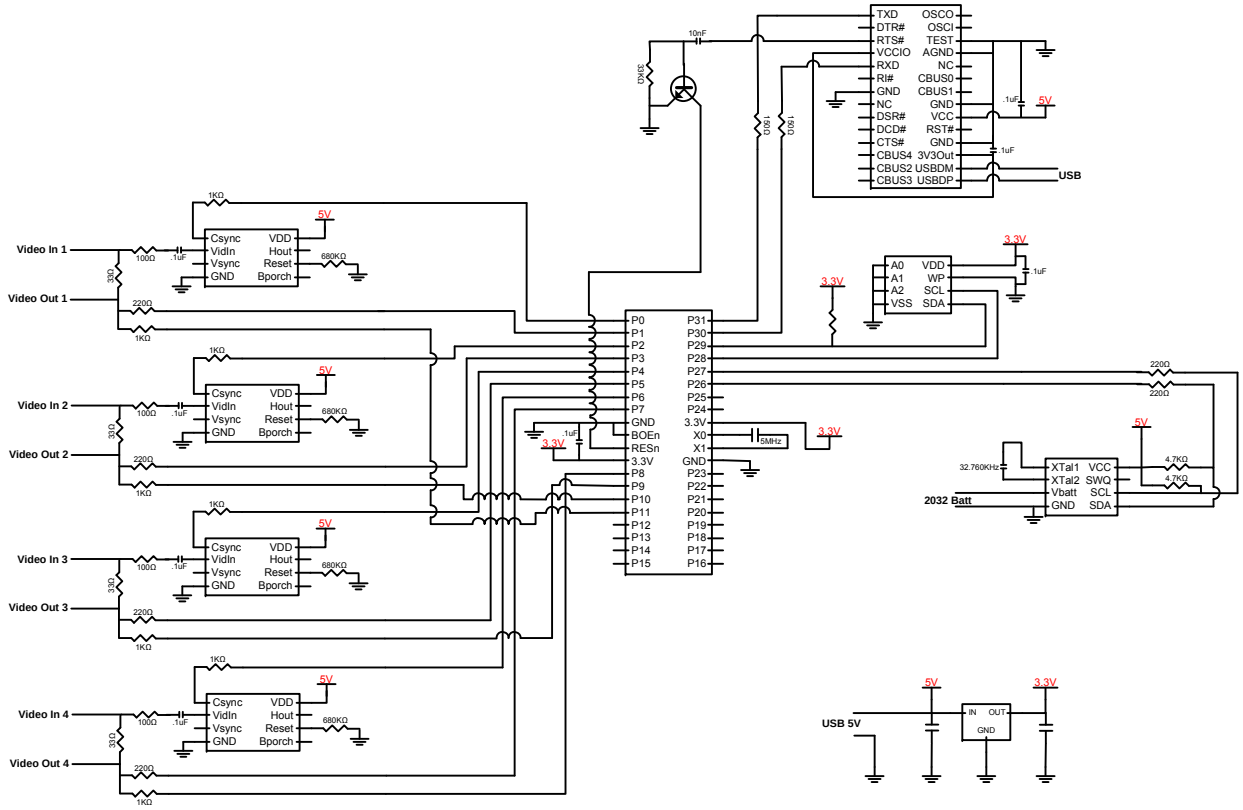
TXD OSCO
DTR# OSCI
RTS# TEST
VCCIO AGND
RXD NC
RI# CBUS0
GND CBUS1
NC GND
DSR# VCC
DCD# RST#
CTS# GND
CBUS4 3V3Out
CBUS2 USBDM
CBUS3 USBDP
USB
10nF
5V
.1uF
1KΩ
680KΩ
Video In 1
Video Out 1
Video In 2
Video Out 2
Video In 3
Video Out 3
Video In 4
Video Out 4
Csync VDD
VidIn Hout
Vsync Reset
GND Bporch
100Ω
3KΩ
220Ω
1KΩ
3.3V
A0 VDD
A1 WP
A2 SCL
VSS SDA
P0 P31
P1 P30
P2 P29
P3 P28
P4 P27
P5 P26
P6 P25
P7 P24
GND 3.3V
BOEn X0
RESn X1
3.3V GND
P8 P23
P9 P22
P10 P21
P11 P20
P12 P19
P13 P18
P14 P17
P15 P16
5MHz
32.760KHz
XTal1 VCC
XTal2 SWQ
Vbatt SCL
GND SDA
4.7KΩ
2032 Batt
USB 5V
IN OUT
GND