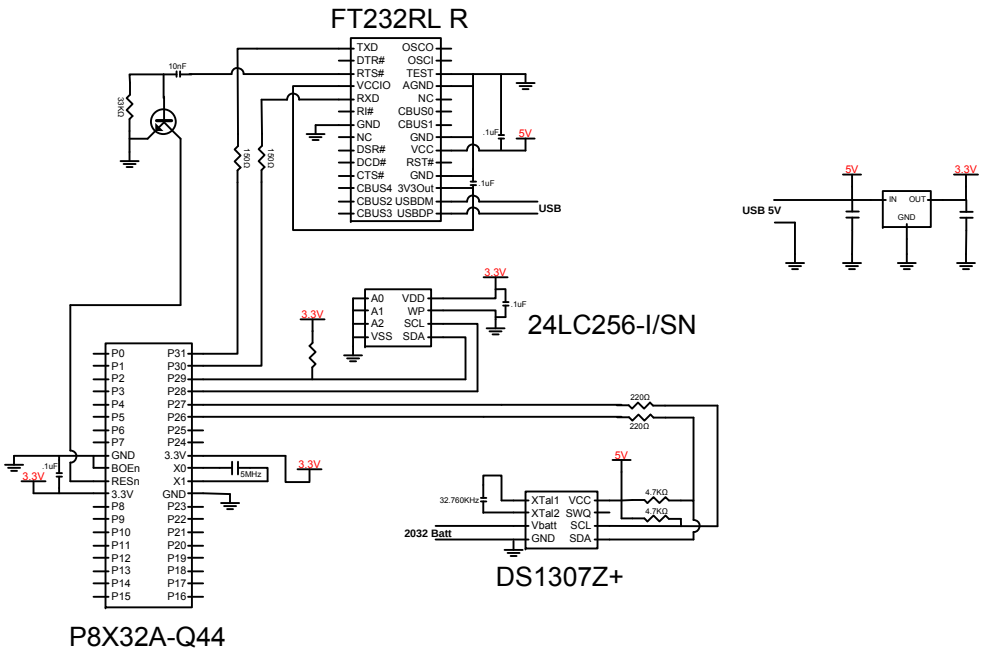
FT232RL R
TXD
DTR#
RTS#
VCCIO
RXD
RI#
GND
NC
DSR#
DCD#
CTS#
CBUS4
CBUS2
CBUS3
OSCO
OSCI
TEST
AGND
NC
CBUS0
CBUS1
GND
VCC
RST#
GND
3V3Out
USBDM
USBDP
USB
10nF
DVS
1.0Ω
0.5Ω
.1uF
5V
3.3V
USB 5V
IN
OUT
GND
A0
A1
A2
VSS
VDD
WP
SCL
SDA
24LC256-I/SN
P0
P1
P2
P3
P4
P5
P6
P7
GND
BOEn
RESn
3.3V
P8
P9
P10
P11
P12
P13
P14
P15
P31
P30
P29
P28
P27
P26
P25
P24
3.3V
X0
X1
GND
P23
P22
P21
P20
P19
P18
P17
P16
5MHz
220Ω
32.760KHz
XTal1
XTal2
Vbatt
GND
VCC
SWQ
SCL
SDA
4.7KΩ
2032 Batt
DS1307Z+
P8X32A-Q44