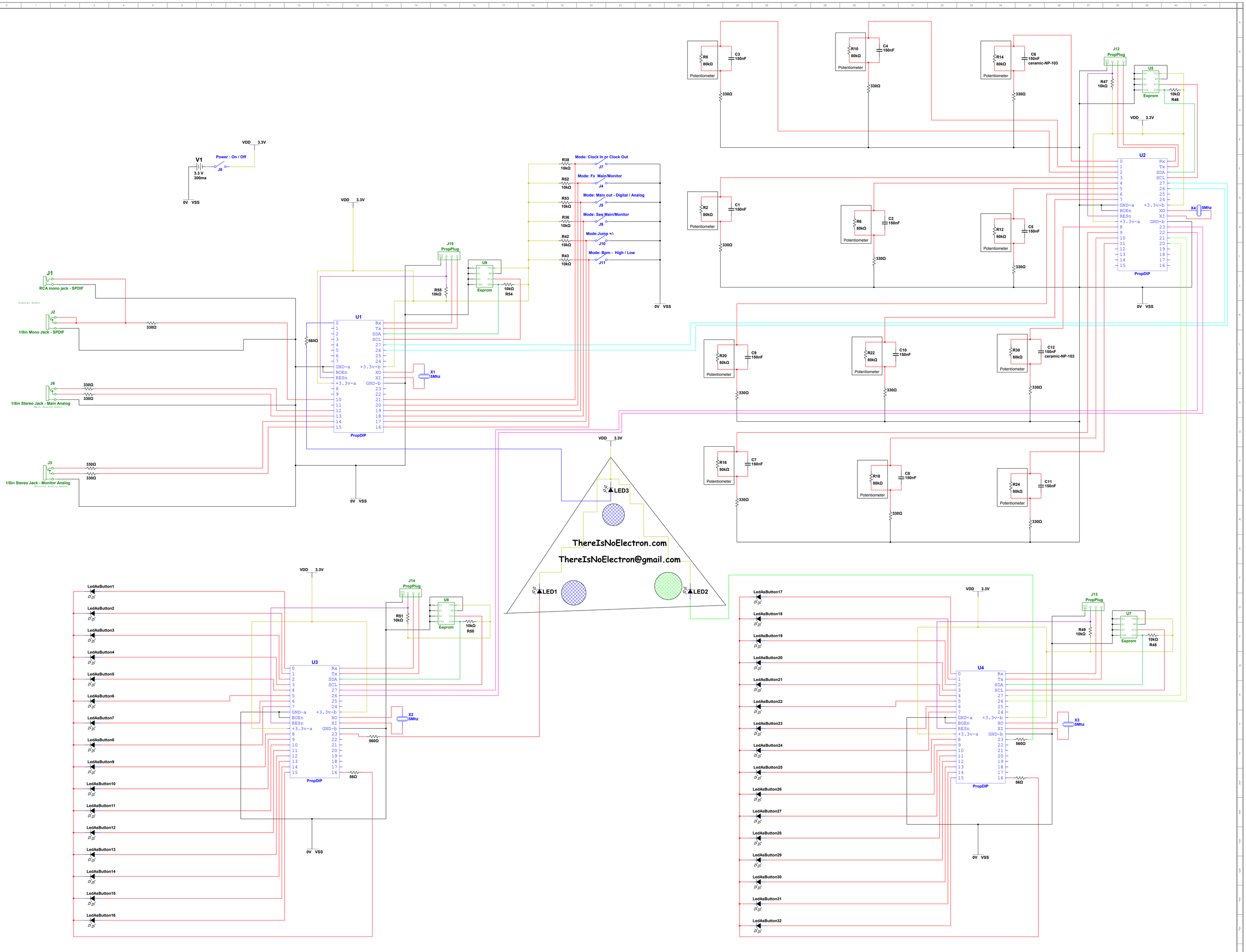
V1
3.3 V
300ma
Power : On / Off
J8
VDD 3.3V
0V VSS
J1
RCA mono jack - SPDIF
Digital Audio
J2
1/8in Mono Jack - SPDIF
J6
1/8in Stereo Jack - Main Analog
Main Analog Audio
J3
1/8in Stereo Jack - Monitor Analog
Monitor Analog Audio
330Ω
560Ω
U1
PropDIP
X1
5Mhz
J15
PropPlug
U9
Eeprom
R55
10kΩ
R54
10kΩ
R38
R52
R53
R36
R42
R43
Mode: Clock In or Clock Out
J7
Mode: Fx Main/Monitor
J4
Mode: Main out - Digital / Analog
J5
Mode: Seq Main/Monitor
J9
Mode:Jump +/-
J10
Mode: Bpm - High / Low
J11
R8
80kΩ
Potentiometer
C3
150nF
R10
80kΩ
C4
150nF
R14
80kΩ
C6
150nF
ceramic-NP-103
J12
PropPlug
U5
Eeprom
R47
10kΩ
R46
10kΩ
U2
PropDIP
X4
5Mhz
R2
80kΩ
C1
150nF
R6
80kΩ
C2
150nF
R12
80kΩ
C5
150nF
R20
80kΩ
C9
150nF
R22
80kΩ
C10
150nF
R30
80kΩ
C12
150nF
ceramic-NP-103
R16
80kΩ
C7
150nF
R18
80kΩ
C8
150nF
R24
80kΩ
C11
150nF
LED3
ThereIsNoElectron.com
ThereIsNoElectron@gmail.com
LED1
LED2
LedAsButton1
LedAsButton2
LedAsButton3
LedAsButton4
LedAsButton5
LedAsButton6
LedAsButton7
LedAsButton8
LedAsButton9
LedAsButton10
LedAsButton11
LedAsButton12
LedAsButton13
LedAsButton14
LedAsButton15
LedAsButton16
U3
PropDIP
J14
PropPlug
U8
Eeprom
R51
10kΩ
R50
10kΩ
X2
5Mhz
56Ω
LedAsButton17
LedAsButton18
LedAsButton19
LedAsButton20
LedAsButton21
LedAsButton22
LedAsButton23
LedAsButton24
LedAsButton25
LedAsButton26
LedAsButton27
LedAsButton28
LedAsButton29
LedAsButton30
LedAsButton31
LedAsButton32
U4
PropDIP
J13
PropPlug
U7
Eeprom
R49
10kΩ
R48
10kΩ
X3
5Mhz