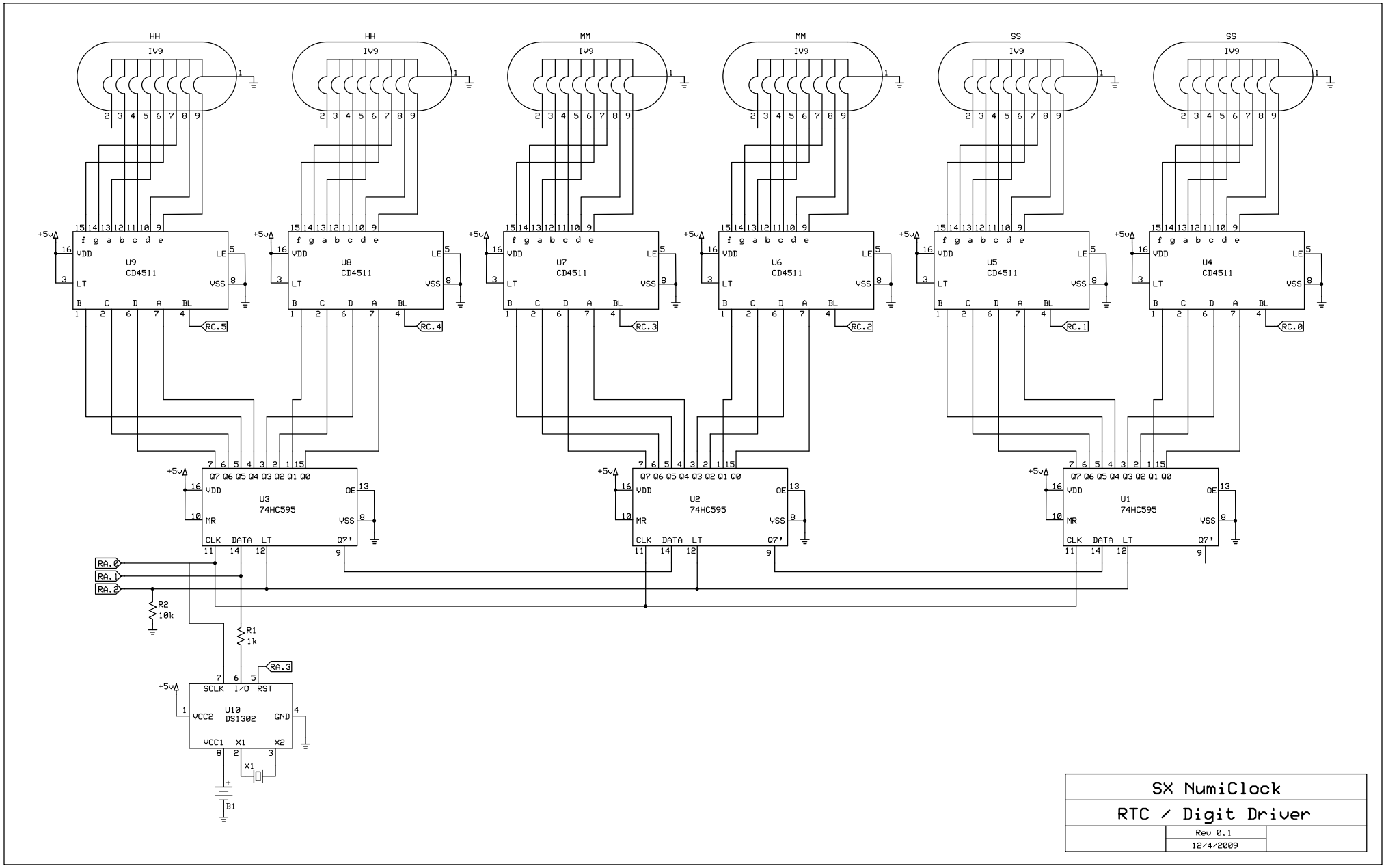
HH
IV9
HH
IV9
MM
IV9
MM
IV9
SS
IV9
SS
IV9
U9
CD4511
U8
CD4511
U7
CD4511
U6
CD4511
U5
CD4511
U4
CD4511
RC.5
RC.4
RC.3
RC.2
RC.1
RC.0
U3
74HC595
U2
74HC595
U1
74HC595
RA.0
RA.1
RA.2
R2
10k
R1
1k
RA.3
U10
DS1302
X1
B1
SX NumiClock
RTC / Digit Driver
Rev 0.1
12/4/2009