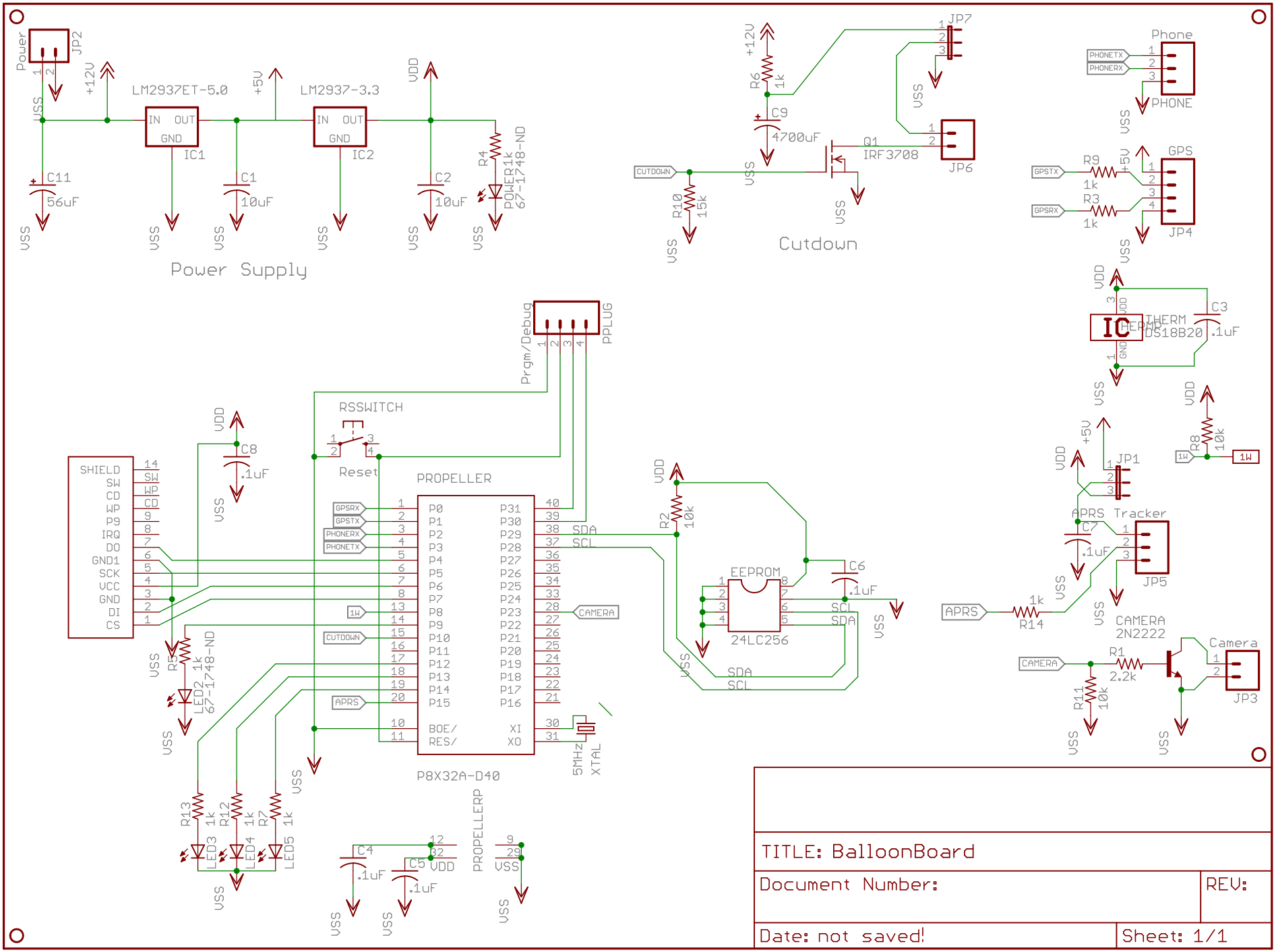

TITLE: BalloonBoard

Document Number:

REV:

Date: not saved!

Sheet: 1/1