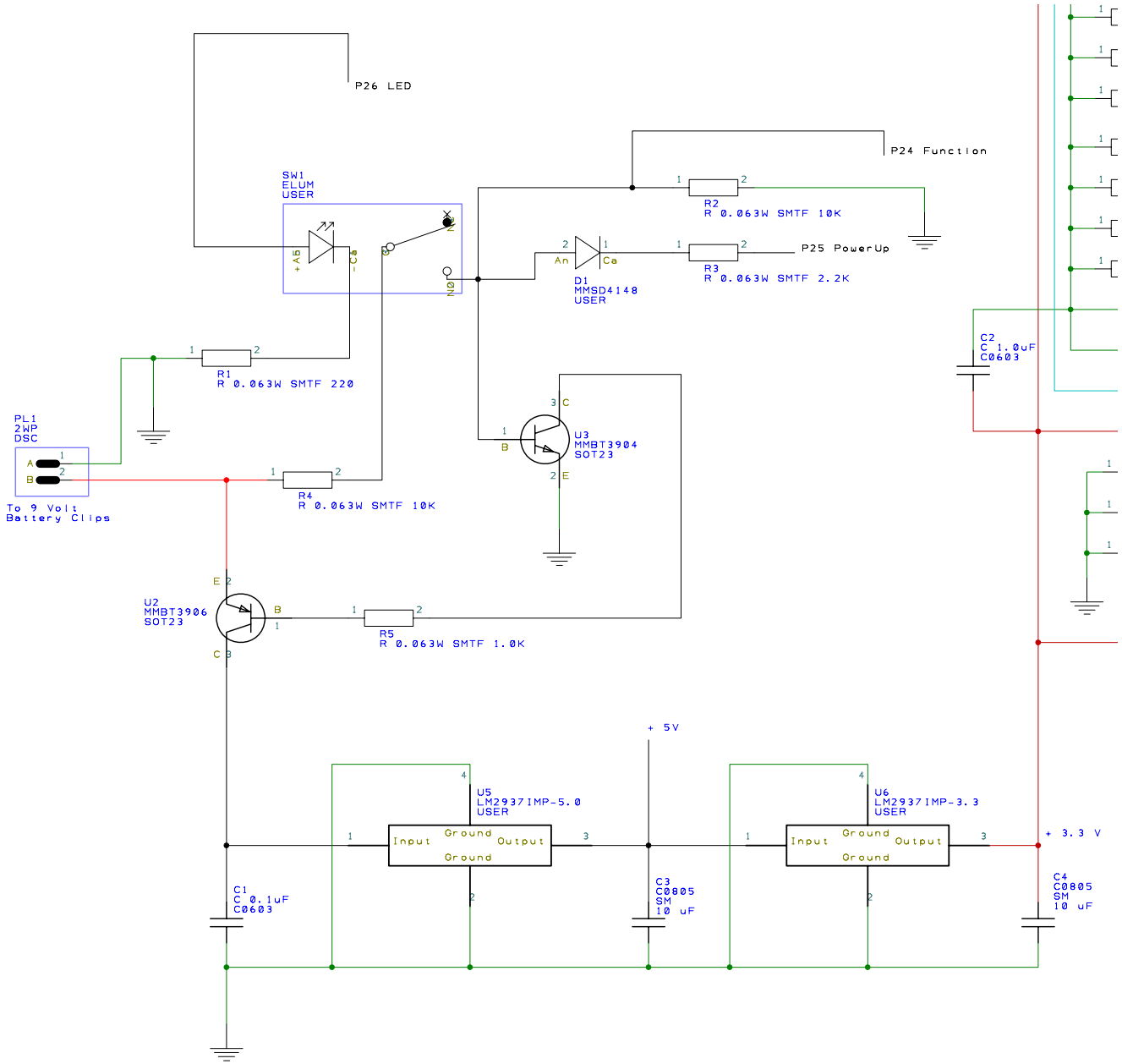
P26 LED
P24 Function
SW1
ELUM
USER
R2
R 0.063W SMTF 10K
D1
MMSD4148
USER
R3
R 0.063W SMTF 2.2K
P25 PowerUp
C2
C 1.0uF
C0603
R1
R 0.063W SMTF 220
PL1
2WP
DSC
To 9 Volt
Battery Clips
U3
MMBT3904
SOT23
R4
R 0.063W SMTF 10K
U2
MMBT3906
SOT23
R5
R 0.063W SMTF 1.0K
+ 5V
U5
LM2937IMP-5.0
USER
U6
LM2937IMP-3.3
USER
Input
Ground
Output
+ 3.3 V
C1
C 0.1uF
C0603
C3
C0805
SM
10 uF
C4
C0805
SM
10 uF