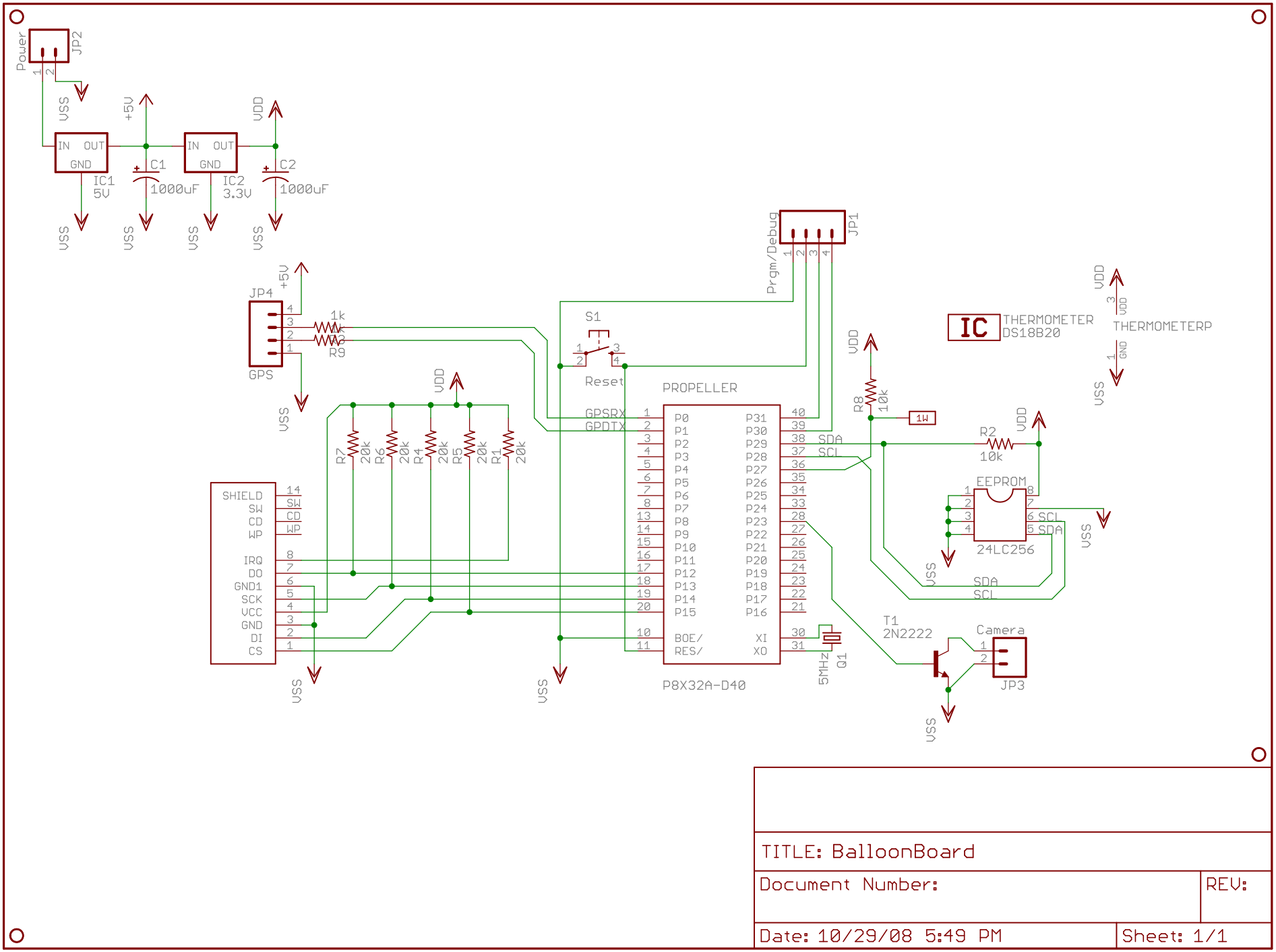

TITLE: BalloonBoard

Document Number:

REV:

Date: 10/29/08 5:49 PM

Sheet: 1/1