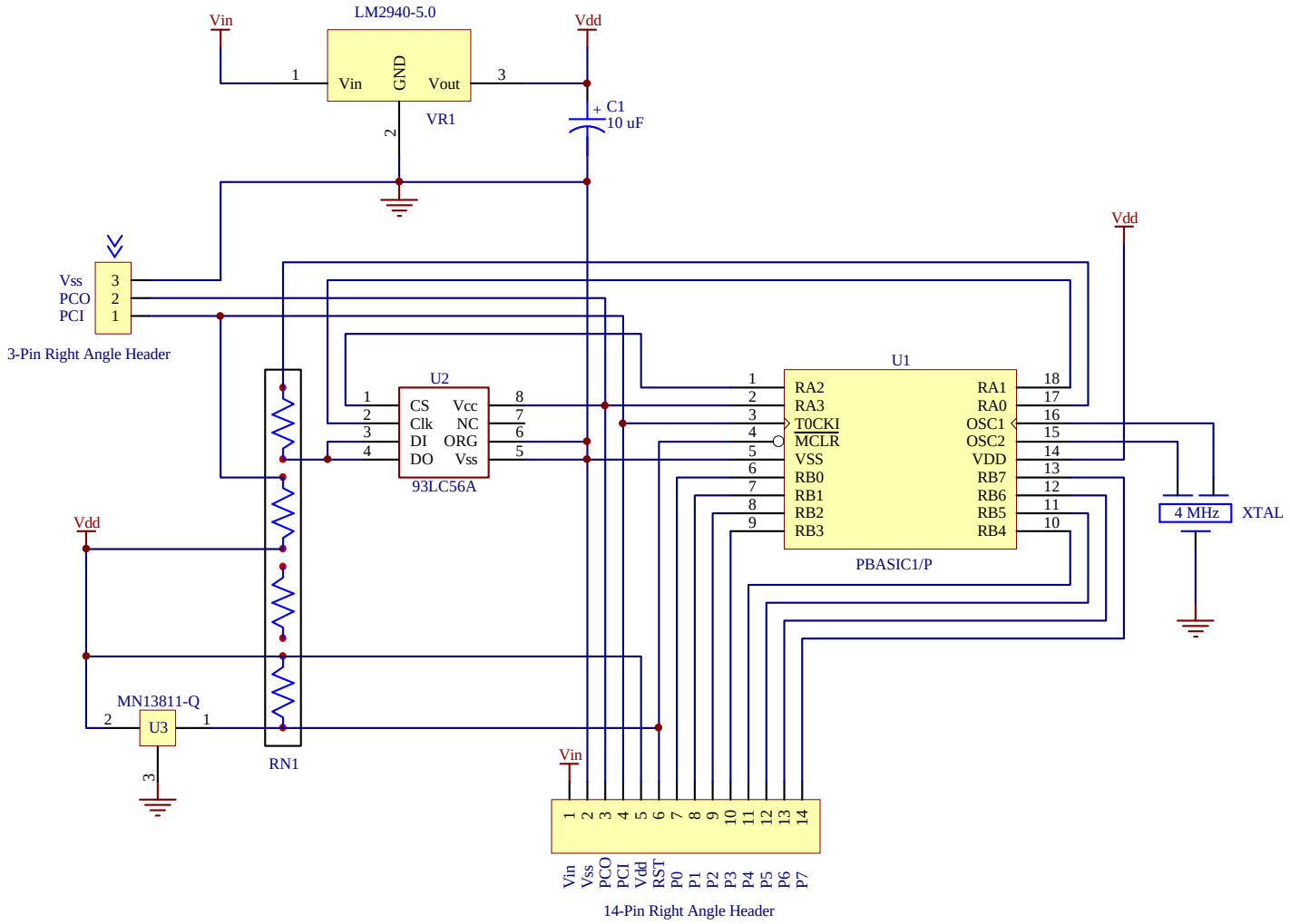

Title	OEM Basic Stamp 1	
Size A	Number	Revision A
Date: 6-Mar-2001		Sheet 1 of 1
File: C:\Client98\Sch98\SCHs\OemBS1.sch		Drawn By: John Barrowman