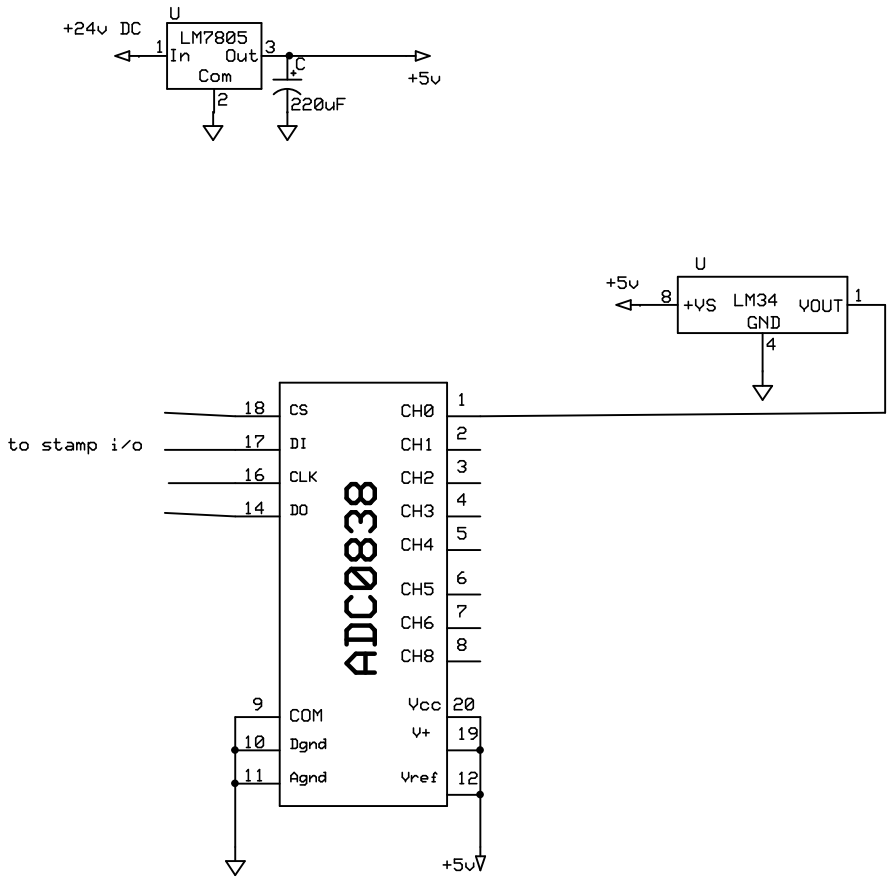


| Company Name | | |
|---|---|---|
| Schematic Name | | |
| Designer's name | Rev 1.0<br>2006/10/09 | Page # or name |