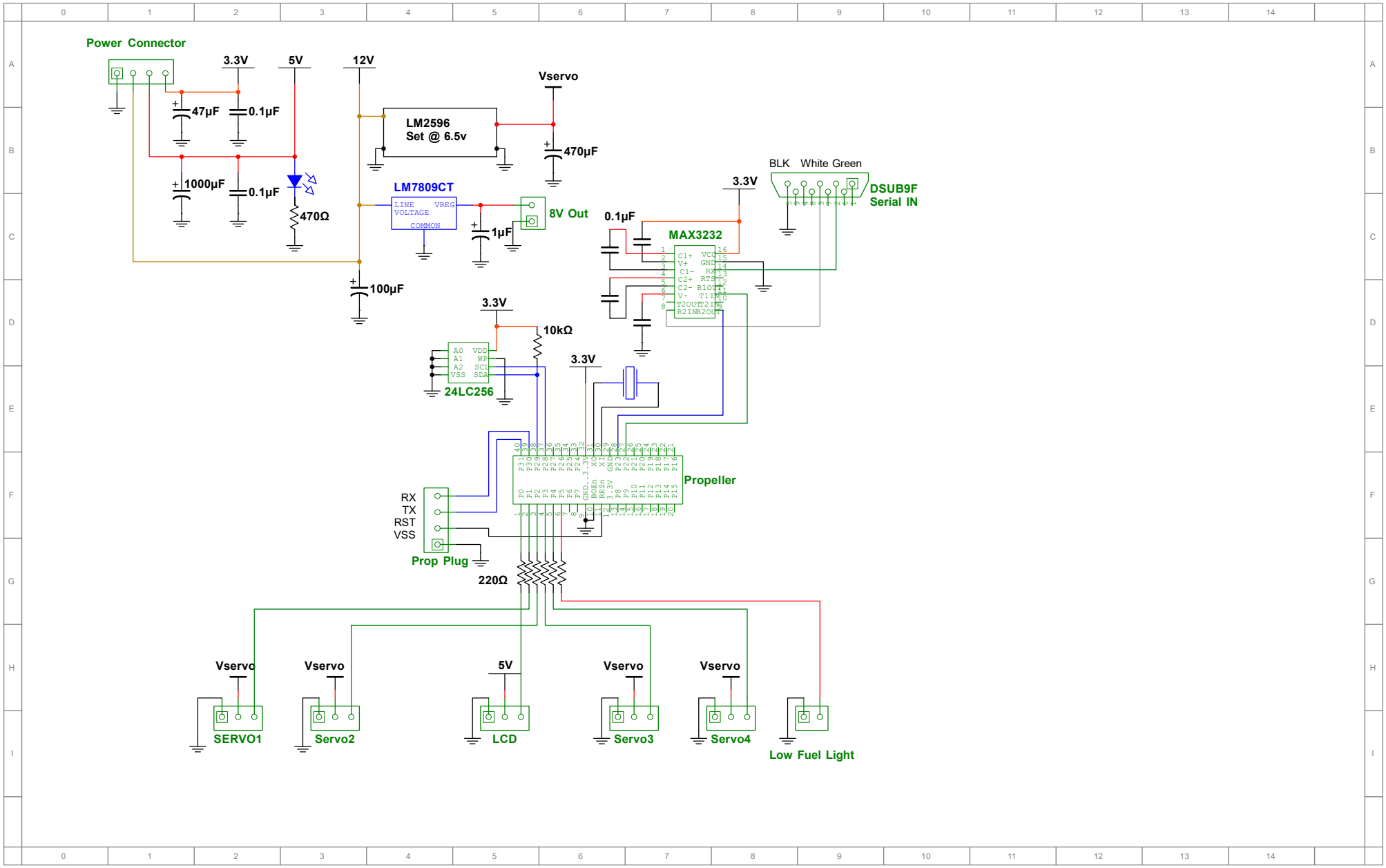
Power Connector
3.3V
5V
12V
47µF
0.1µF
1000µF
0.1µF
470Ω
LM2596
Set @ 6.5v
Vservo
470µF
LM7809CT
LINE VOLTAGE
VREG
COMMON
1µF
8V Out
100µF
3.3V
BLK White Green
DSUB9F
Serial IN
0.1µF
MAX3232
C1+ VCC
V+ GND
C1- RX
C2+ RTS
C2- R1OUT
V- T1IN
T2OUT T2IN
R2IN R2OUT
3.3V
10kΩ
A0 VDD
A1 WP
A2 SCL
VSS SDA
24LC256
3.3V
Propeller
RX
TX
RST
VSS
Prop Plug
220Ω
Vservo
SERVO1
Vservo
Servo2
5V
LCD
Vservo
Servo3
Vservo
Servo4
Low Fuel Light