Microcontroller

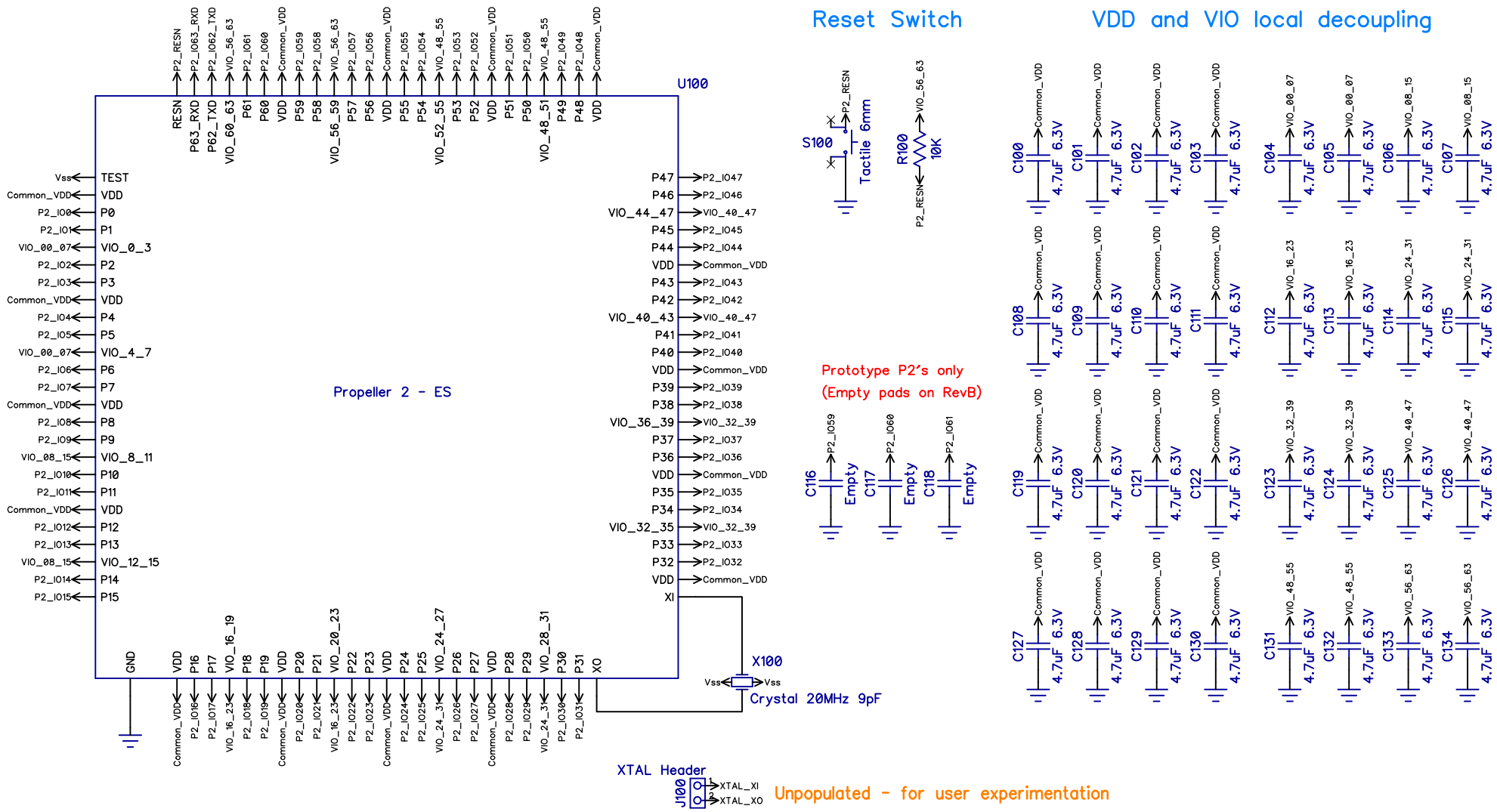

Parallax Inc.
599 Menlo Drive
Rocklin, CA 95765

(916) 624-8333
http://www.parallax.com/

Parallax P2X8C4M64P-ES Evaluation Board

ENGINEERING SAMPLE - NOT FOR RESALE
PRE-PRODUCTION EVALUATION

Copyright 2019 Parallax Incorporated. All Rights Reserved.

Part Number: 64000-ES
Revision: B

Last Update: 21 Aug 2019 (MM)

I/O Headers

Edge expansion headers

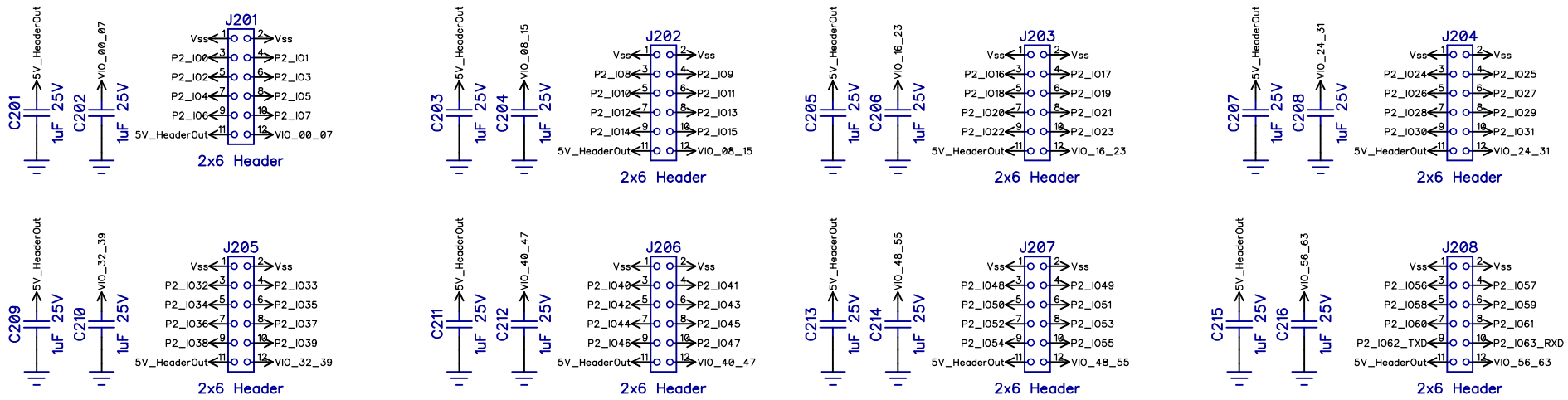

Voltage Selection/Disable for Header 5V pins

Parallax Inc.
599 Menlo Drive
Rocklin, CA 95765

(916) 624-8333
http://www.parallax.com/

Parallax P2X8C4M64P-ES Evaluation Board

ENGINEERING SAMPLE - NOT FOR RESALE
PRE-PRODUCTION EVALUATION

Copyright 2019 Parallax Incorporated. All Rights Reserved.

Part Number: 64000-ES
Revision: B

Last Update: 21 Aug 2019 (MM)

Memory

MicroSD

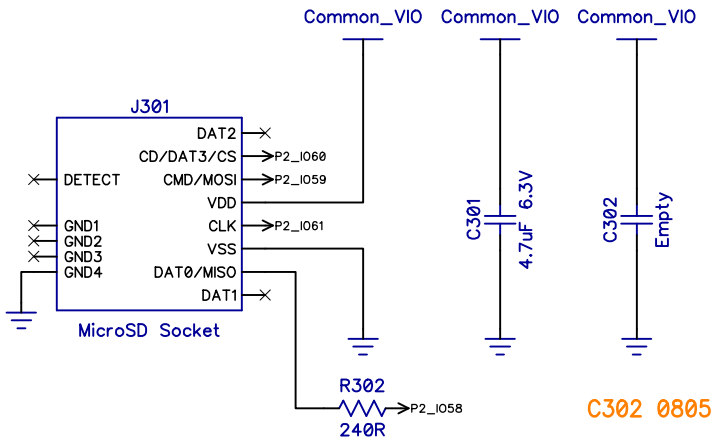

SPI Flash

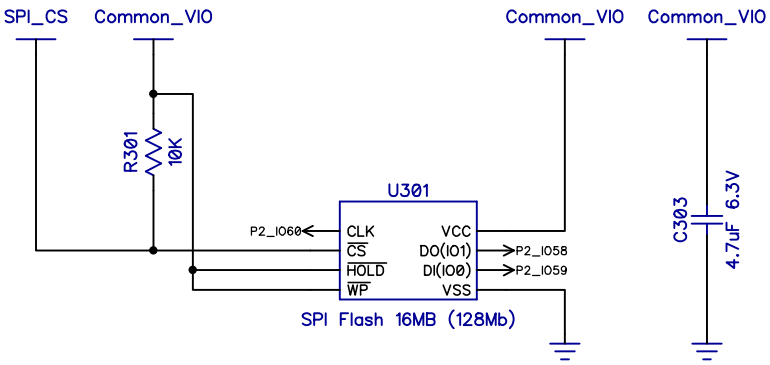

C302 0805 footprint included for SD testing

Boot Mode Selection	FLASH	P59 △	P59 ▽
Serial window of 60 seconds, default. (When SD card is NOT inserted)	OFF	OFF	OFF
Serial window of 60 seconds, overrides SPI Flash and SD card.	ON or OFF	ON	OFF
Serial window of 100 ms, then SPI flash. If SPI flash fails then serial window of 60 seconds.	ON	OFF	OFF
SPI flash only (fast boot), no serial window. If SPI flash fails then shutdown.	ON	OFF	ON
SD card with serial window on failure. If SD card fails then serial window of 60 seconds.	OFF	OFF	OFF
SD card only, no serial window. If SD card fails then shutdown.	OFF	OFF	ON

Boot options and "BOD" brownout enable switch

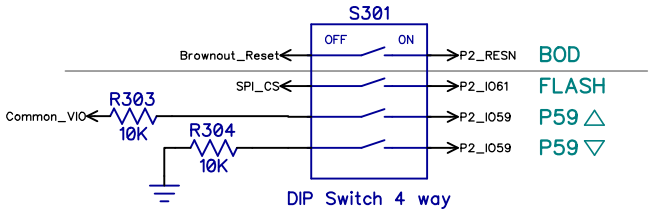

Parallax Inc.
599 Menlo Drive
Rocklin, CA 95765

(916) 624-8333
http://www.parallax.com/

Parallax P2X8C4M64P-ES Evaluation Board

ENGINEERING SAMPLE - NOT FOR RESALE
PRE-PRODUCTION EVALUATION

Copyright 2019 Parallax Incorporated. All Rights Reserved.

Part Number: 64000-ES
Revision: B

Last Update: 21 Aug 2019 (MM)

USB PC Socket

PC-USB power socket and P2-to-PC serial data

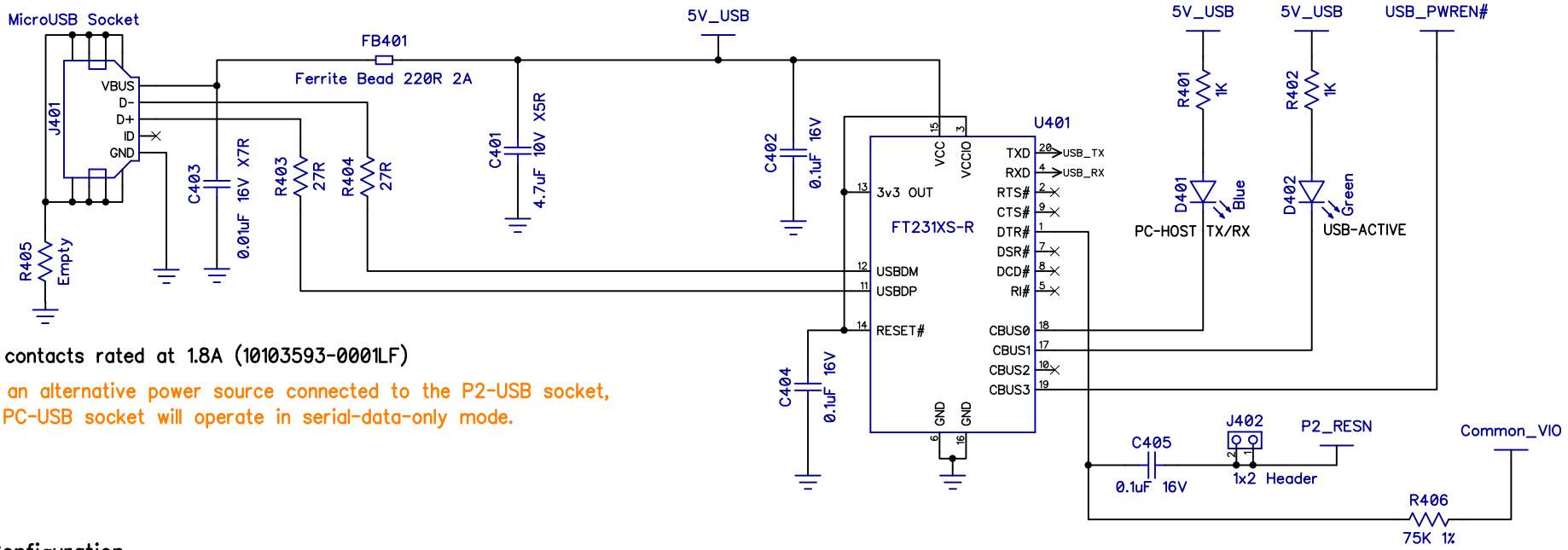

USB contacts rated at 1.8A (10103593-0001LF)

With an alternative power source connected to the P2-USB socket, this PC-USB socket will operate in serial-data-only mode.

J402 - Allow DTR disable AND/OR remote contol of RESn

FTDI Configuration

CBUS0 = TX&RXLED
CBUS1 = PWREN#
CBUS2 = TriState
CBUS3 = PWREN#

USB Config / MaxPower = 500mA

Manufacturer = Parallax Inc
Product Description = Propeller P2-EVAL-ES

Set CBUS3 to Tristate to disable PC-USB power (ie. Serial only)

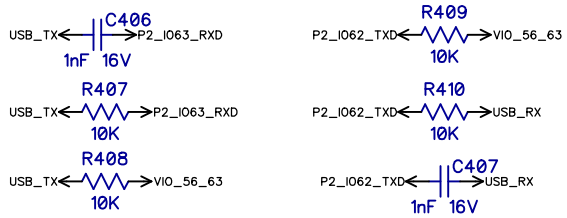

Pull-up serial bus to prevent floating-state terminal chars
Include series to prevent parasitic power in either direction
Keep as single components to allow high-speed testing. (PASS > 3MBaud)

Parallax Inc.
599 Menlo Drive
Rocklin, CA 95765

(916) 624-8333
http://www.parallax.com/

Parallax P2X8C4M64P-ES Evaluation Board

ENGINEERING SAMPLE - NOT FOR RESALE
PRE-PRODUCTION EVALUATION

Copyright 2019 Parallax Incorporated. All Rights Reserved.

Part Number: 64000-ES
Revision: B

Last Update: 21 Aug 2019 (MM)

USB Aux Power Socket

P2-USB high current power socket and P2 USB data

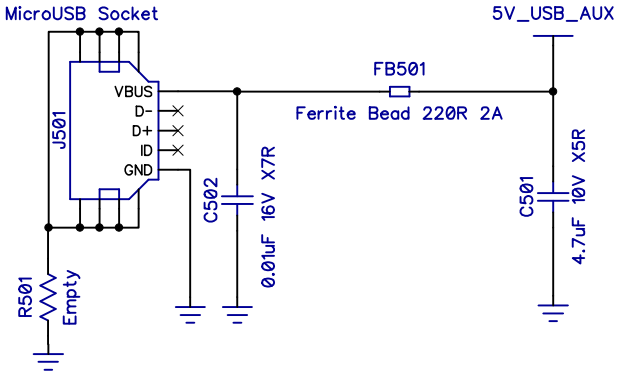

USB contacts rated at 1.8A (10103593-0001LF)

Auxiliary power header pads (unpopulated)

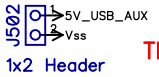

Unpopulated pads - Use with care !

These pads are unprotected! Proceed at your own risk!

The pads at J502 connect directly to the P2-AUX 5V input power rail.
Source power here, for example to power a fan, or power your P2-EVAL instead of from USB.

IF you use these pads to supply power to the P2-EVAL board,
you must ensure no other power source is connected to the P2-USB socket!
Do NOT exceed the maximum input voltage of 5.5V. Minimum input voltage is 4.5V

Use of J502 Auxiliary power header pads at USER OWN RISK!

Parallax Inc.
599 Menlo Drive
Rocklin, CA 95765

(916) 624-8333
http://www.parallax.com/

Parallax P2X8C4M64P-ES Evaluation Board

ENGINEERING SAMPLE - NOT FOR RESALE
PRE-PRODUCTION EVALUATION

Copyright 2019 Parallax Incorporated. All Rights Reserved.

Part Number: 64000-ES
Revision: B

Last Update: 21 Aug 2019 (MM)

USB Current Limit and Logic

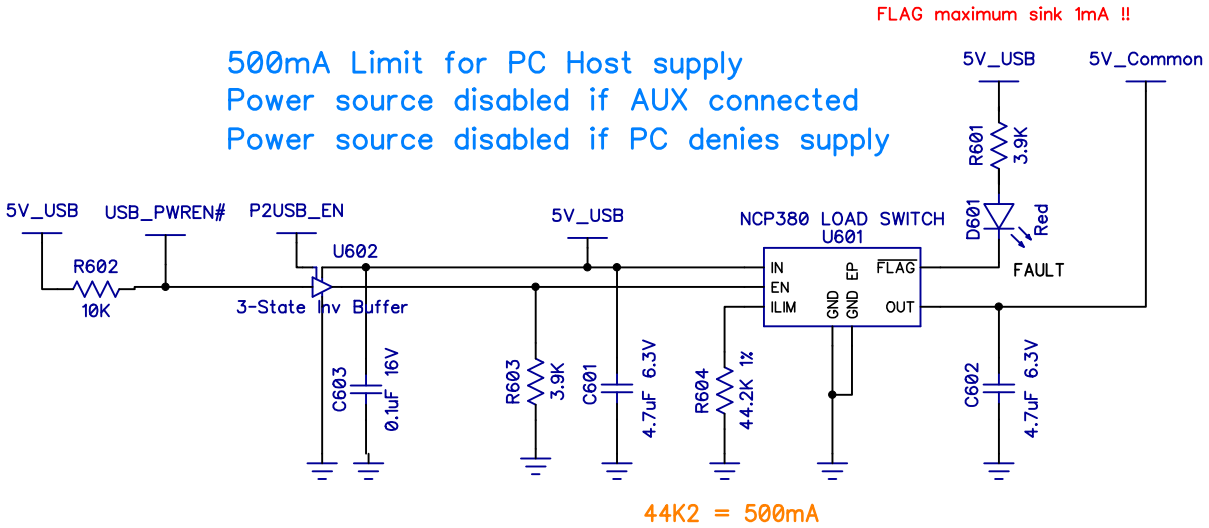

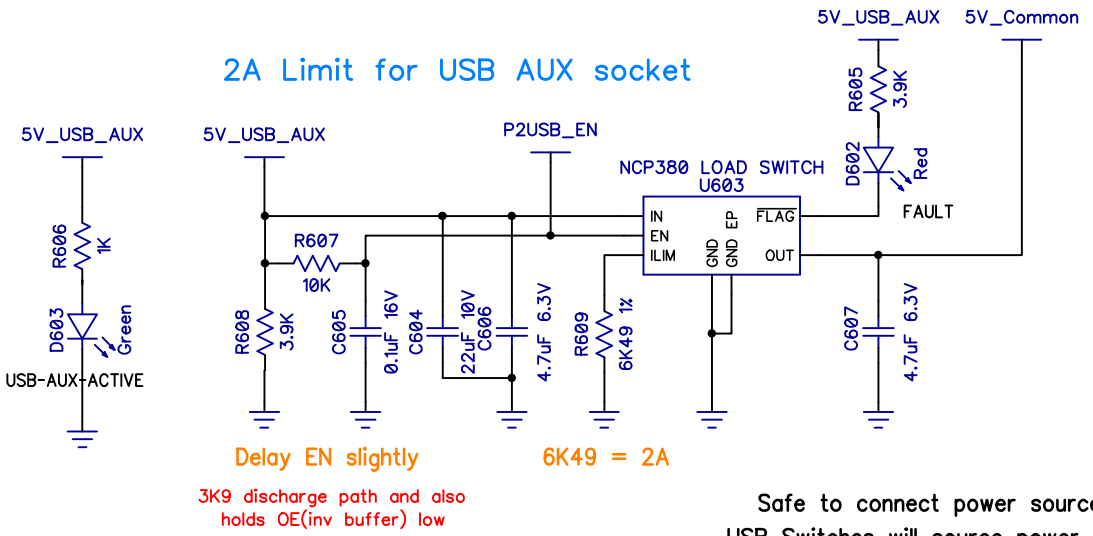

Safe to connect power sources to both USB sockets at the same time.
USB Switches will source power from only one socket, AUX socket preferred.

Parallax Inc.
599 Menlo Drive
Rocklin, CA 95765

(916) 624-8333
http://www.parallax.com/

Parallax P2X8C4M64P-ES Evaluation Board

ENGINEERING SAMPLE - NOT FOR RESALE
PRE-PRODUCTION EVALUATION

Copyright 2019 Parallax Incorporated. All Rights Reserved.

Part Number: 64000-ES
Revision: B

Last Update: 21 Aug 2019 (MM)

Common VDD 1V8

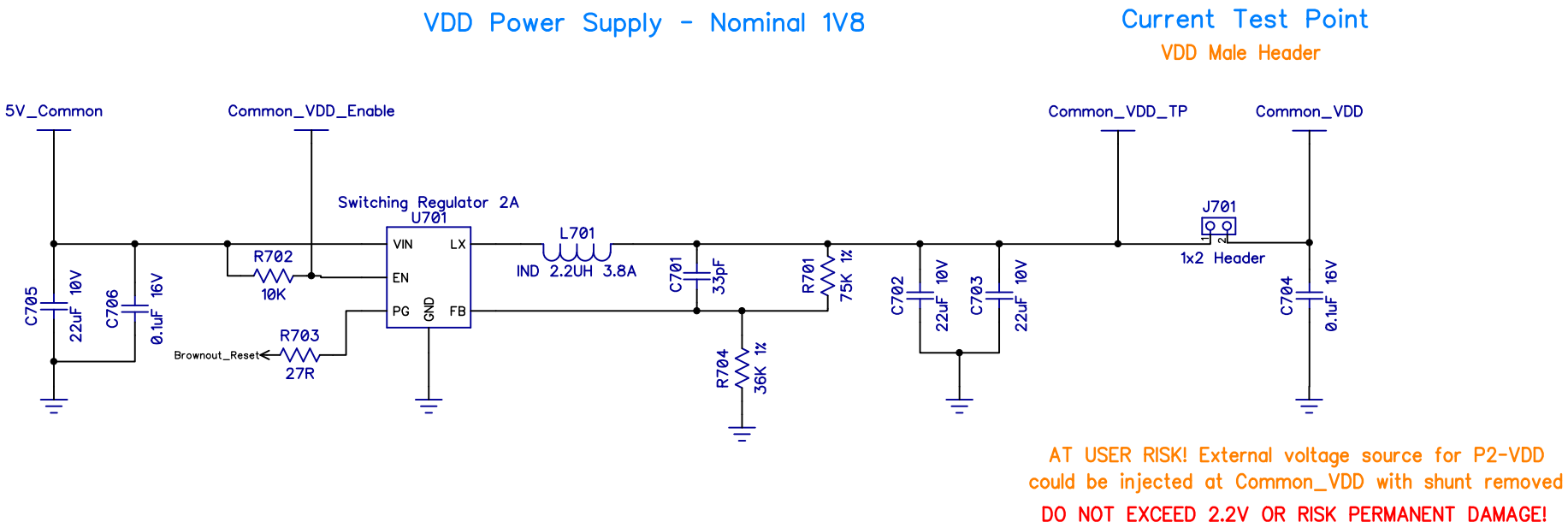

Parallax Inc.
599 Menlo Drive
Rocklin, CA 95765

(916) 624-8333
http://www.parallax.com/

Parallax P2X8C4M64P-ES Evaluation Board

ENGINEERING SAMPLE - NOT FOR RESALE
PRE-PRODUCTION EVALUATION

Copyright 2019 Parallax Incorporated. All Rights Reserved.

Part Number: 64000-ES
Revision: B

Last Update: 21 Aug 2019 (MM)

Common VIO 3V3

VIO Power Supply - LDO 3V3 for Flash and SD card

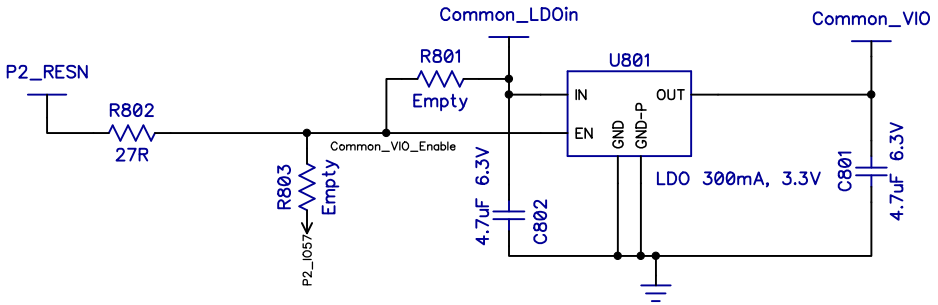

Allow user to toggle SD card power from P2-IO57

P2_RESn (Reset button press) will disable this LDO, to powercycle the Flash and SD card

Fast pulse on DTR will not provide reset

To disable this feature, remove R802 AND install suitable pullup resistor at R801 (10K, 0402 package suggested)

Optional configuration

R803 would allow user control of reset from P2 IO57 (240 Ohm, 0402 package suggested)

Parallax Inc.
599 Menlo Drive
Rocklin, CA 95765

(916) 624-8333
http://www.parallax.com/

Parallax P2X8C4M64P-ES Evaluation Board

ENGINEERING SAMPLE - NOT FOR RESALE
PRE-PRODUCTION EVALUATION

Copyright 2019 Parallax Incorporated. All Rights Reserved.

Part Number: 64000-ES
Revision: B

Last Update: 21 Aug 2019 (MM)

LDO 3V3

Current Test Point

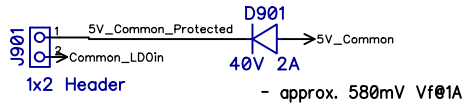

VIO Male Header

Low noise VIO 3V3 local regulation

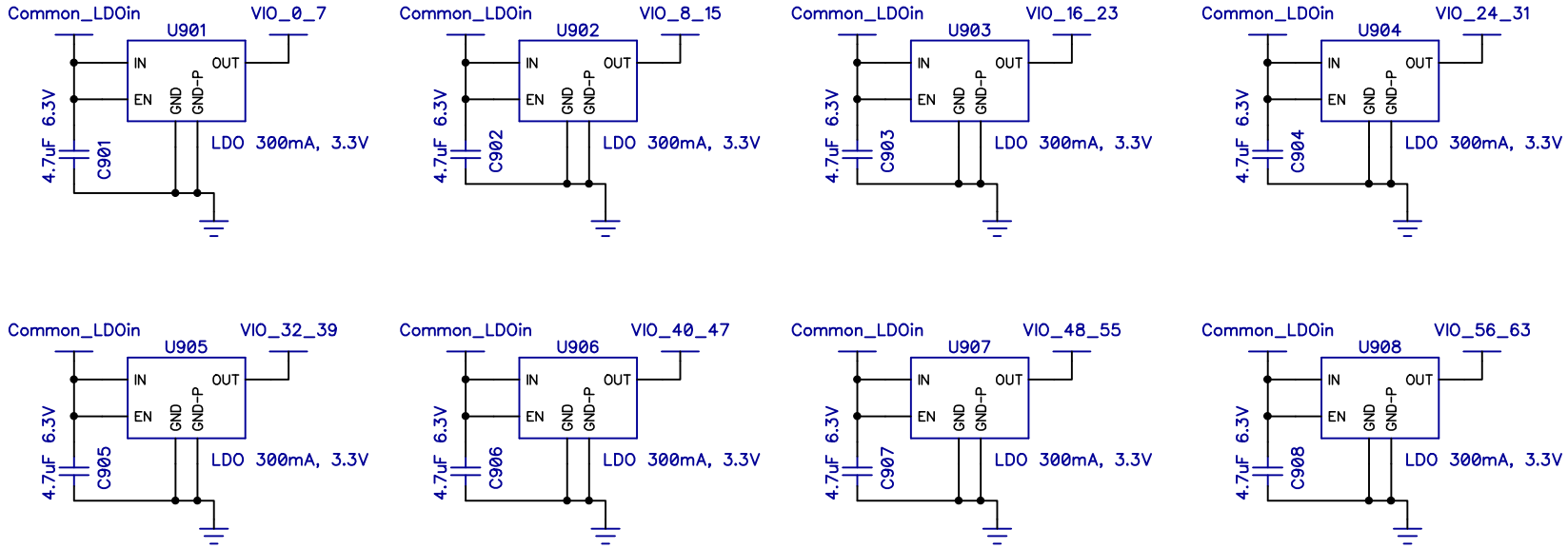

Note: LDO output caps located beside P2 microcontroller

These power sources ensure a fixed 3V3 low noise supply for each group of eight P2 smart pins.

A single high-current regulator could be used, but this design has some advantages, including:

- Less boardspace and lower part cost
- Thermal footprint spread over significantly larger area of copper
- Regulates directly to the power pins, removing power-path losses
- No requirement for local beads/caps for analog experiments, eliminates filtering losses
- Groups of IO's isolated from power supply cross-interference
- Limits power pin issues in each group from impacting others, including undervoltage, overvoltage and short-circuit protection

Parallax Inc.
599 Menlo Drive
Rocklin, CA 95765

(916) 624-8333
http://www.parallax.com/

Parallax P2X8C4M64P-ES Evaluation Board

ENGINEERING SAMPLE - NOT FOR RESALE
PRE-PRODUCTION EVALUATION

Copyright 2019 Parallax Incorporated. All Rights Reserved.

Part Number: 64000-ES
Revision: B

Last Update: 21 Aug 2019 (MM)

LEDs

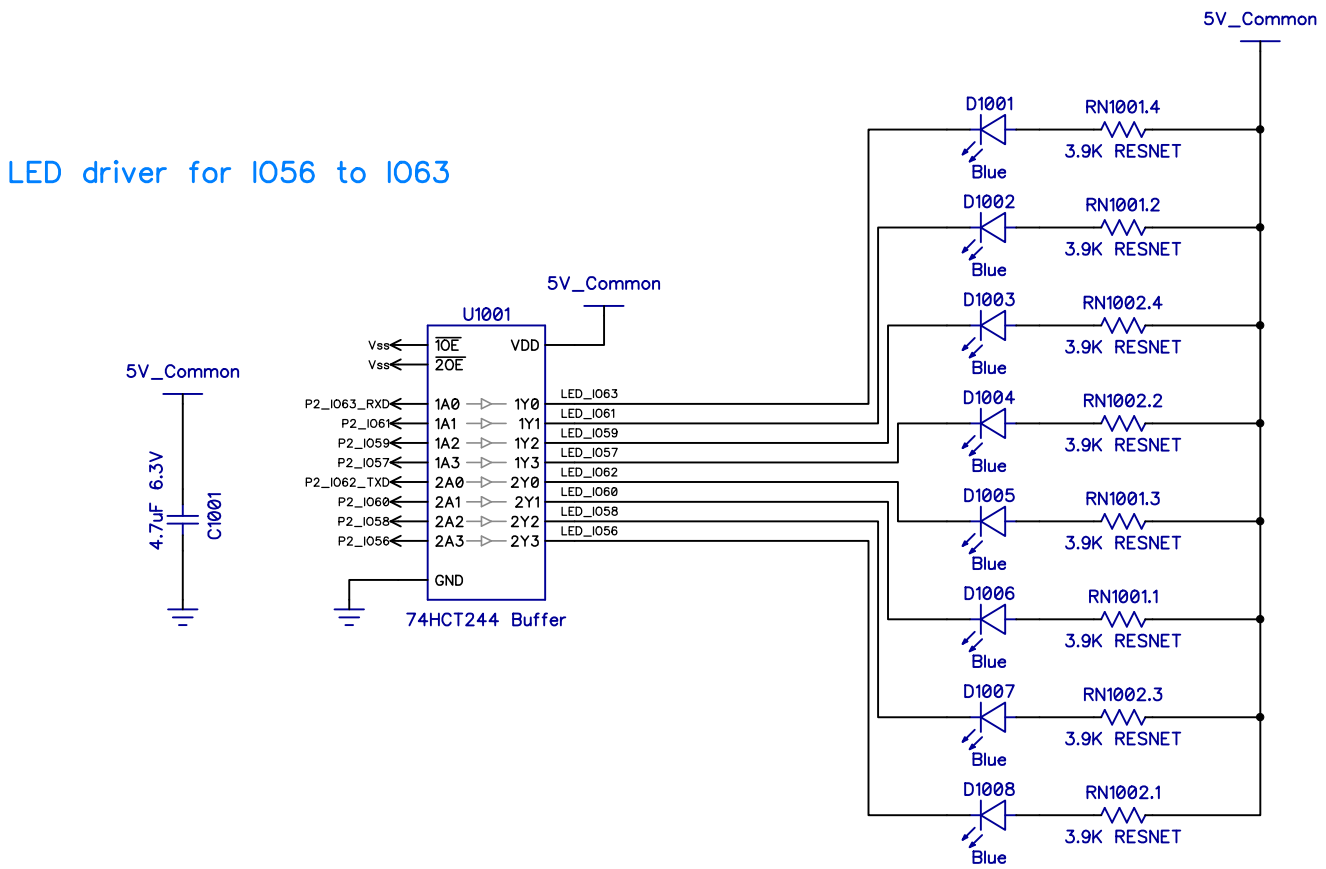

P2_IO56 to P2_IO63 are typically idle high and active low.

The LED's are wired such that they turn ON when the corresponding P2_IO pin asserts low.

Buffer input capacitance typically 3.5pF.

Parallax Inc.
599 Menlo Drive
Rocklin, CA 95765

(916) 624-8333
http://www.parallax.com/

Parallax P2X8C4M64P-ES Evaluation Board

ENGINEERING SAMPLE - NOT FOR RESALE
PRE-PRODUCTION EVALUATION

Copyright 2019 Parallax Incorporated. All Rights Reserved.

Part Number: 64000-ES
Revision: B

Last Update: 21 Aug 2019 (MM)

Misc

Mounting holes

Mounting hole diameter 3.2mm

40mm hole spacing (56.56mm diagonal), suitable for 50mm fan

Gnd test points

BOM only - mfg

PCB

PCB for P2 Eval Board RevB

BOM only - kitted parts

HW1101
CONN SHUNT

HW1102
CONN SHUNT

HW1103
CONN SHUNT

HW1104
Self adhesive foot

HW1105
Self adhesive foot

HW1106
Self adhesive foot

HW1107
Self adhesive foot

Parallax Inc.
599 Menlo Drive
Rocklin, CA 95765

(916) 624-8333
http://www.parallax.com/

Parallax P2X8C4M64P-ES Evaluation Board

ENGINEERING SAMPLE - NOT FOR RESALE
PRE-PRODUCTION EVALUATION

Copyright 2019 Parallax Incorporated. All Rights Reserved.

Part Number: 64000-ES
Revision: B

Last Update: 21 Aug 2019 (MM)