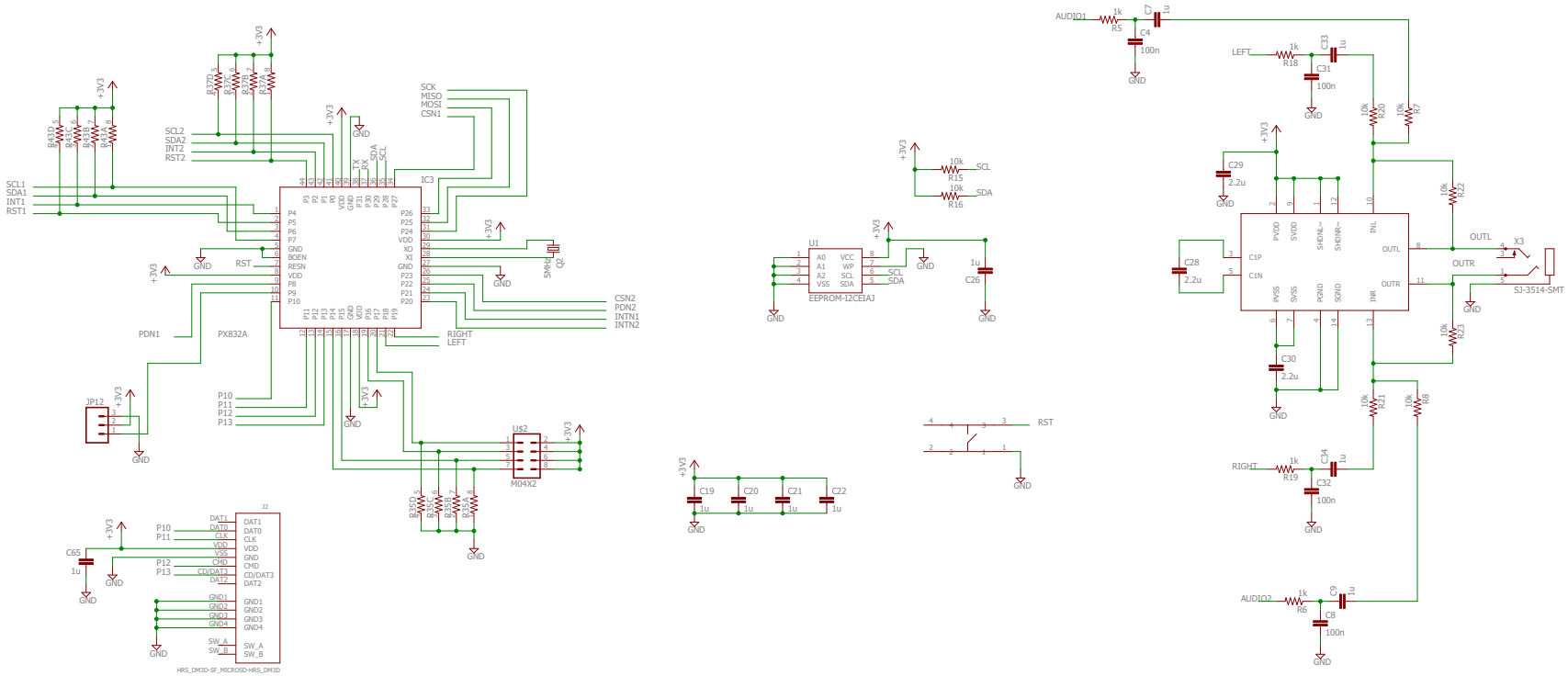
IC3
PX832A
SCL1
SDA1
INT1
RST1
SCL2
SDA2
INT2
RST2
SCK
MISO
MOSI
CSN1
CSN2
PDN2
INTN1
INTN2
RIGHT
LEFT
PDN1
RST
P10
P11
P12
P13
JP12
U52
M04X2
J2
HRS_DM3D-SF_MICROSD-HRS_DM3D
U1
EEPROM-I2CEIAJ
SCL
SDA
AUDIO1
AUDIO2
LEFT
RIGHT
OUTL
OUTR
X3
SJ-3514-SMT
+3V3
GND

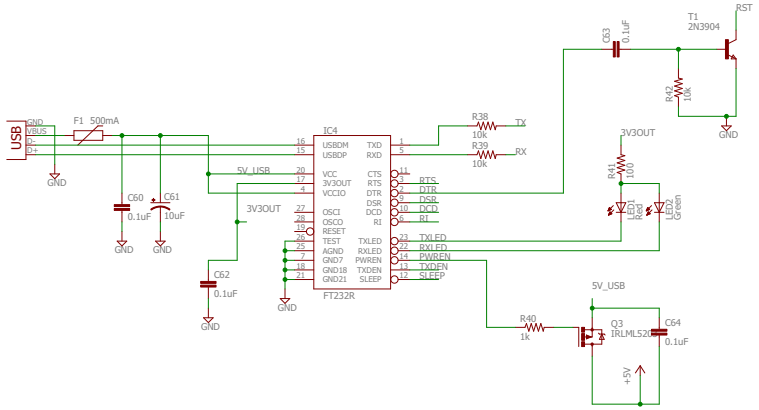
USB
GND
VBUS
D-
D+
F1 500mA
GND
C60
0.1uF
C61
10uF
GND
GND
5V_USB
3V3OUT
C62
0.1uF
GND
IC4
USBDM
USBDP
VCC
3V3OUT
VCCIO
OSCI
OSCO
RESET
TEST
AGND
GND7
GND18
GND21
TXD
RXD
CTS
RTS
DTR
DSR
DCD
RI
TXLED
RXLED
PWREN
TXDEN
SLEEP
FT232R
GND
R38
10k
TX
R39
10k
RX
RTS
DTR
DSR
DCD
RI
TXLED
RXLED
PWREN
TXDEN
SLEEP
C63
0.1uF
T1
2N3904
RST
R42
10k
GND
3V3OUT
R41
100
LED1
Red
LED2
Green
5V_USB
R40
1k
Q3
IRLML5203
C64
0.1uF
+5V

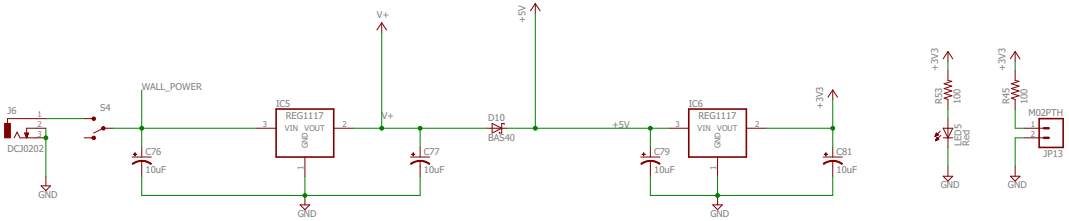
J6
DCJ0202
GND
S4
WALL_POWER
C76
10uF
IC5
REG1117
VIN VOUT
GND
GND
V+
V+
C77
10uF
D10
BAS40
+5V
+5V
C79
10uF
IC6
REG1117
VIN VOUT
GND
GND
+3V3
C81
10uF
+3V3
R3
100
LED5
Red
GND
+3V3
R45
100
M02PTH
JP13
GND

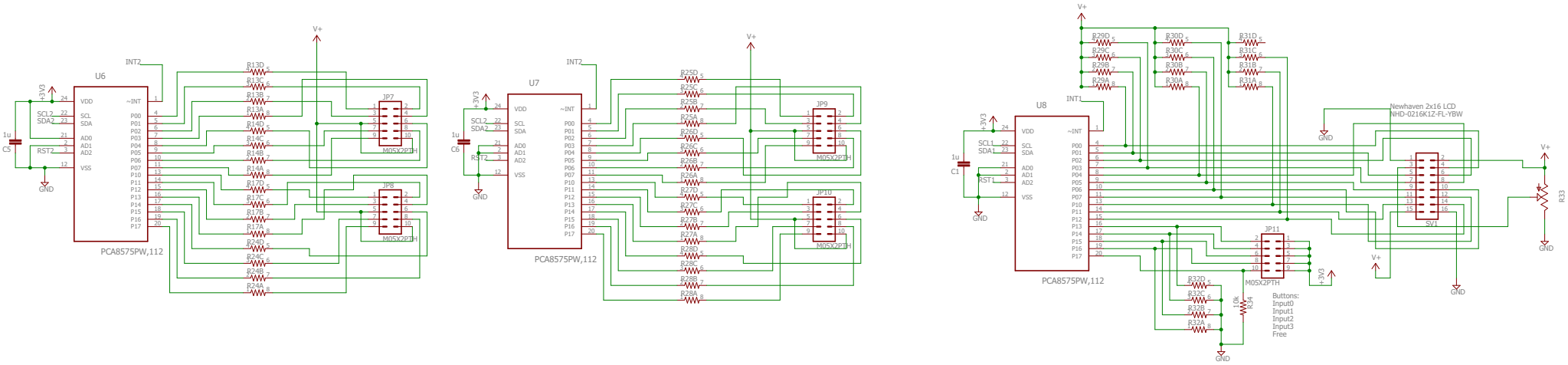
U6
U7
U8
PCA8575PW,112
PCA8575PW,112
PCA8575PW,112
INT2
INT2
INT1
+3V3
SCL2
SDA2
RST2
SCL1
SDA1
RST1
1u
C5
C6
C1
GND
V+
JP7
JP8
JP9
JP10
JP11
M05X2PTH
Newhaven 2x16 LCD
NHD-0216K1Z-FL-YBW
SV1
R33
R34
10k
Buttons:
Input0
Input1
Input2
Input3
Free

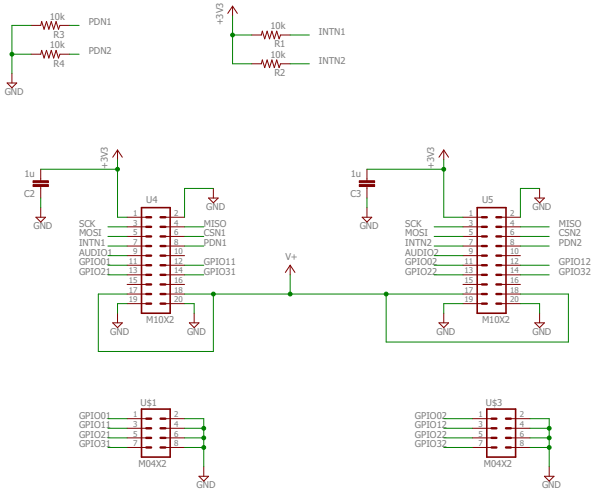
10k
R3
PDN1
10k
R4
PDN2
GND
+3V3
10k
R1
INTN1
10k
R2
INTN2
1u
C2
GND
+3V3
U4
GND
SCK
MOSI
INTN1
AUDIO1
GPIO01
GPIO21
MISO
CSN1
PDN1
GPIO11
GPIO31
M10X2
GND
GND
V+
1u
C3
GND
+3V3
U5
GND
SCK
MOSI
INTN2
AUDIO2
GPIO02
GPIO22
MISO
CSN2
PDN2
GPIO12
GPIO32
M10X2
GND
GND
U$1
GPIO01
GPIO11
GPIO21
GPIO31
M04X2
GND
U$3
GPIO02
GPIO12
GPIO22
GPIO32
M04X2
GND