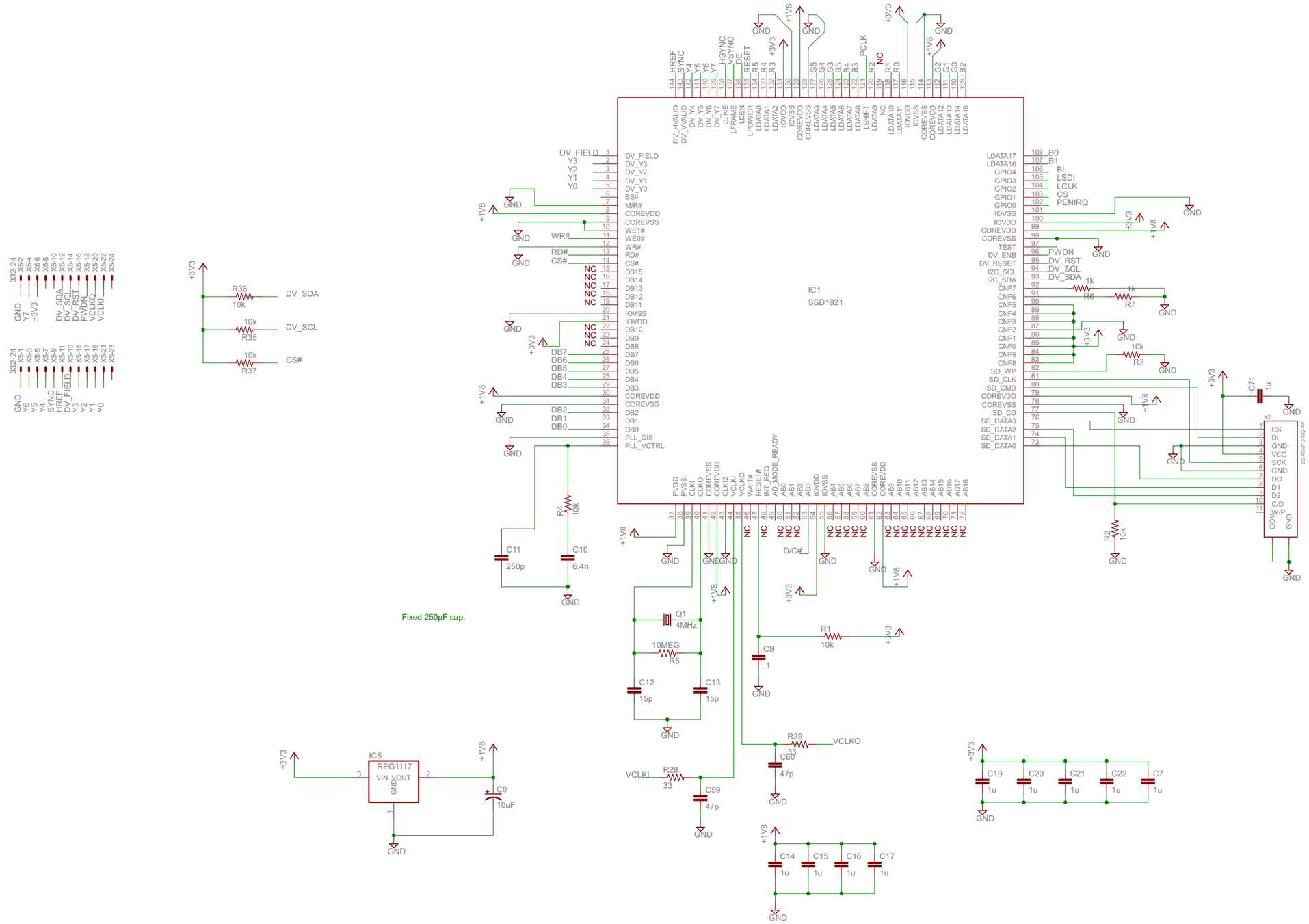

8/12/2014 9:24:39 AM f=0.80 E:\Parallax\Propeller\Eagle\SSD1921\SSD1921_Test9a.sch (Sheet: 1/6)

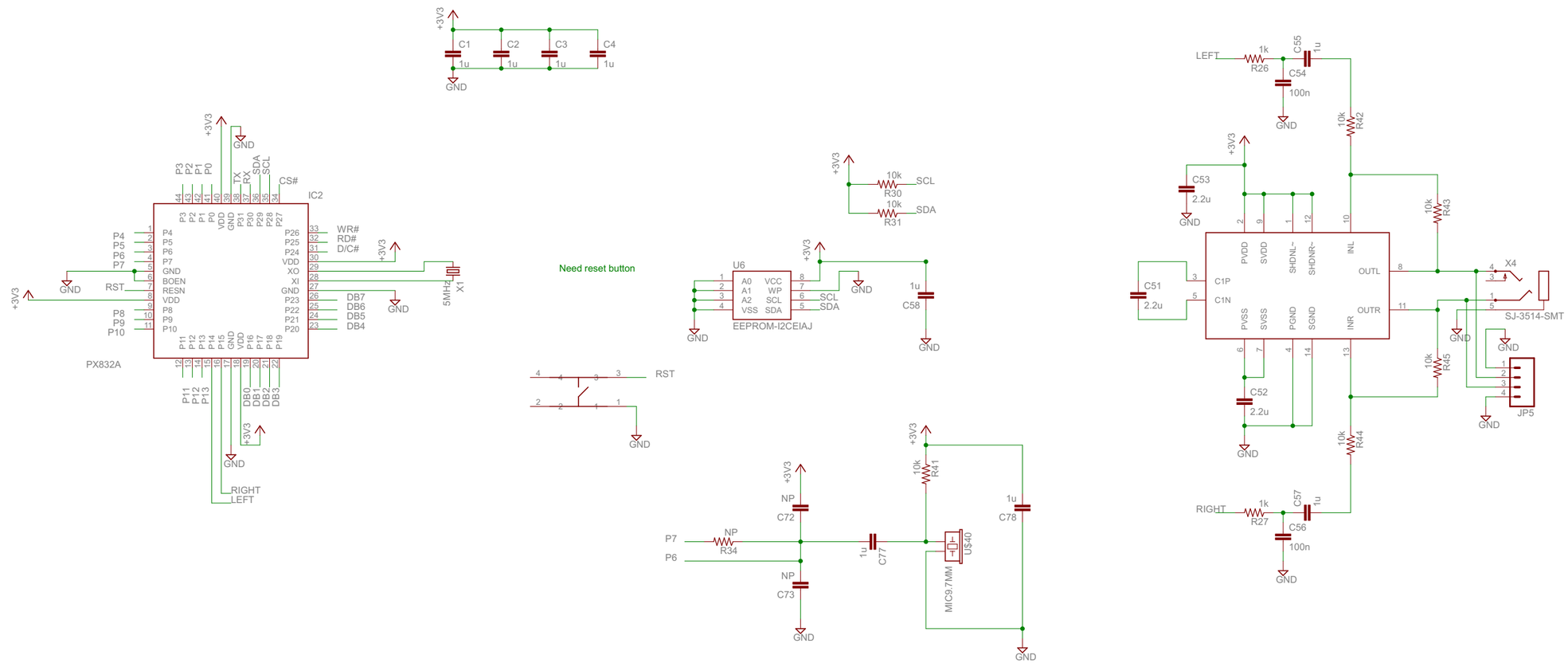
+3V3
C1
C2
C3
C4
1u
GND
IC2
PX832A
CS#
TX
RX
SDA
SCL
WR#
RD#
D/C#
RST
DB7
DB6
DB5
DB4
DB0
DB1
DB2
DB3
RIGHT
LEFT
5MHz
X1
Need reset button
U6
A0
A1
A2
VSS
VCC
WP
SCL
SDA
EEPROM-I2CEIAJ
C58
R30
R31
10k
NP
C72
C73
C77
C78
R34
R41
U540
MIC9.7MM
LEFT
RIGHT
R26
R27
C54
C55
C56
C57
100n
C53
C51
C52
2.2u
R42
R43
R44
R45
PVDD
SVDD
SHDNL~
SHDNR~
INL
OUTL
C1P
C1N
PVSS
SVSS
PGND
SGND
INR
OUTR
X4
SJ-3514-SMT
JP5

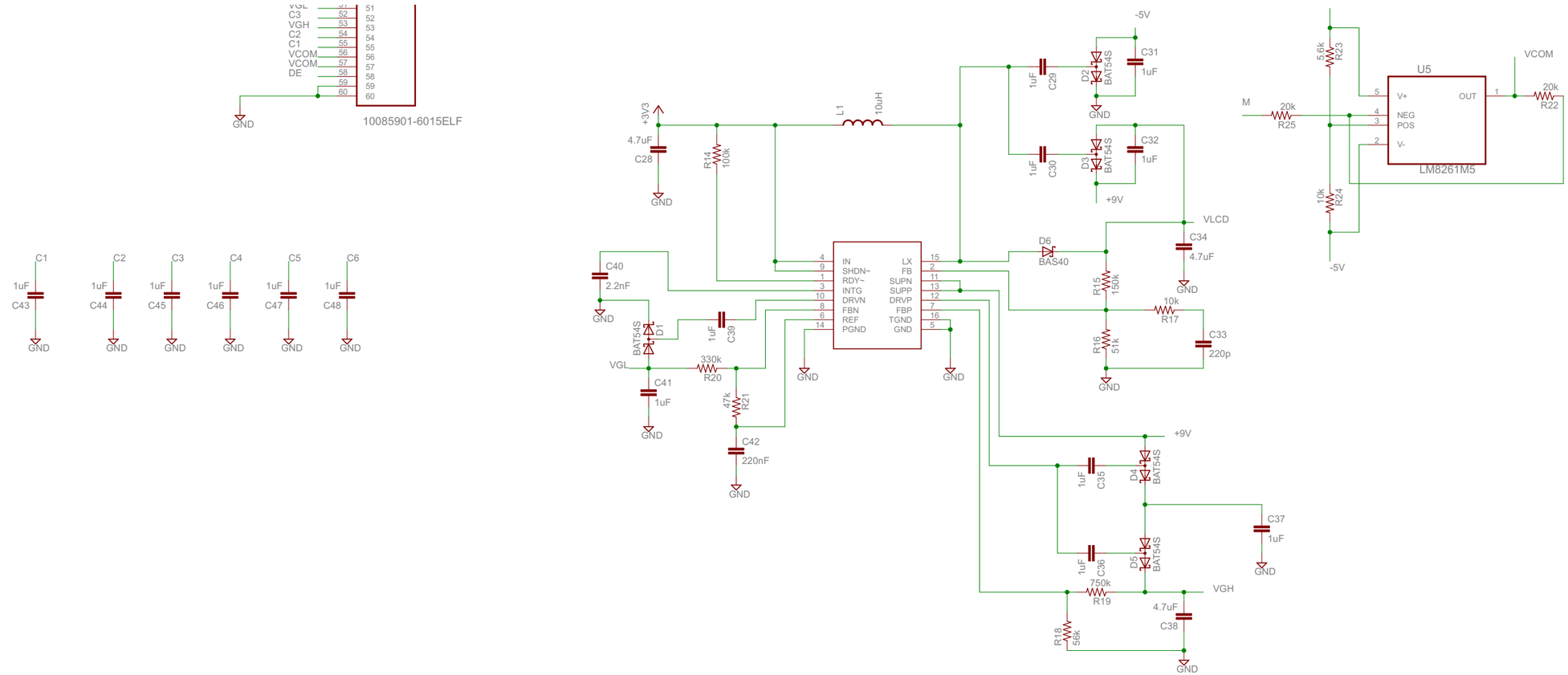
VGL 51
C3 52 52
VGH 53 53
C2 54 54
C1 55 55
VCOM 56 56
VCOM 57 57
DE 58 58
59 59
60 60
GND
10085901-6015ELF
C1 1uF C43 GND
C2 1uF C44 GND
C3 1uF C45 GND
C4 1uF C46 GND
C5 1uF C47 GND
C6 1uF C48 GND
+3V3
4.7uF C28 GND
R14 100k
L1 10uH
-5V
1uF C29
D2 BAT54S
C31 1uF
GND
1uF C30
D3 BAT54S
C32 1uF
+9V
VLCD
C34 4.7uF
GND
D6 BAS40
R15 150k
10k R17
R16 51k
C33 220p
GND
C40 2.2nF
GND
BAT54S D1
1uF C39
VGL
330k R20
C41 1uF
GND
47k R21
C42 220nF
GND
IN
SHDN~
RDY~
INTG
DRVN
FBN
REF
PGND
LX
FB
SUPN
SUPP
DRVP
FBP
TGND
GND
+9V
1uF C35
D4 BAT54S
C37 1uF
GND
1uF C36
D5 BAT54S
750k R19
VGH
4.7uF C38
R18 56k
GND
5.6k R23
U5
VCOM
M
20k R25
V+
NEG
POS
V-
OUT
20k R22
LM8261M5
10k R24
-5V

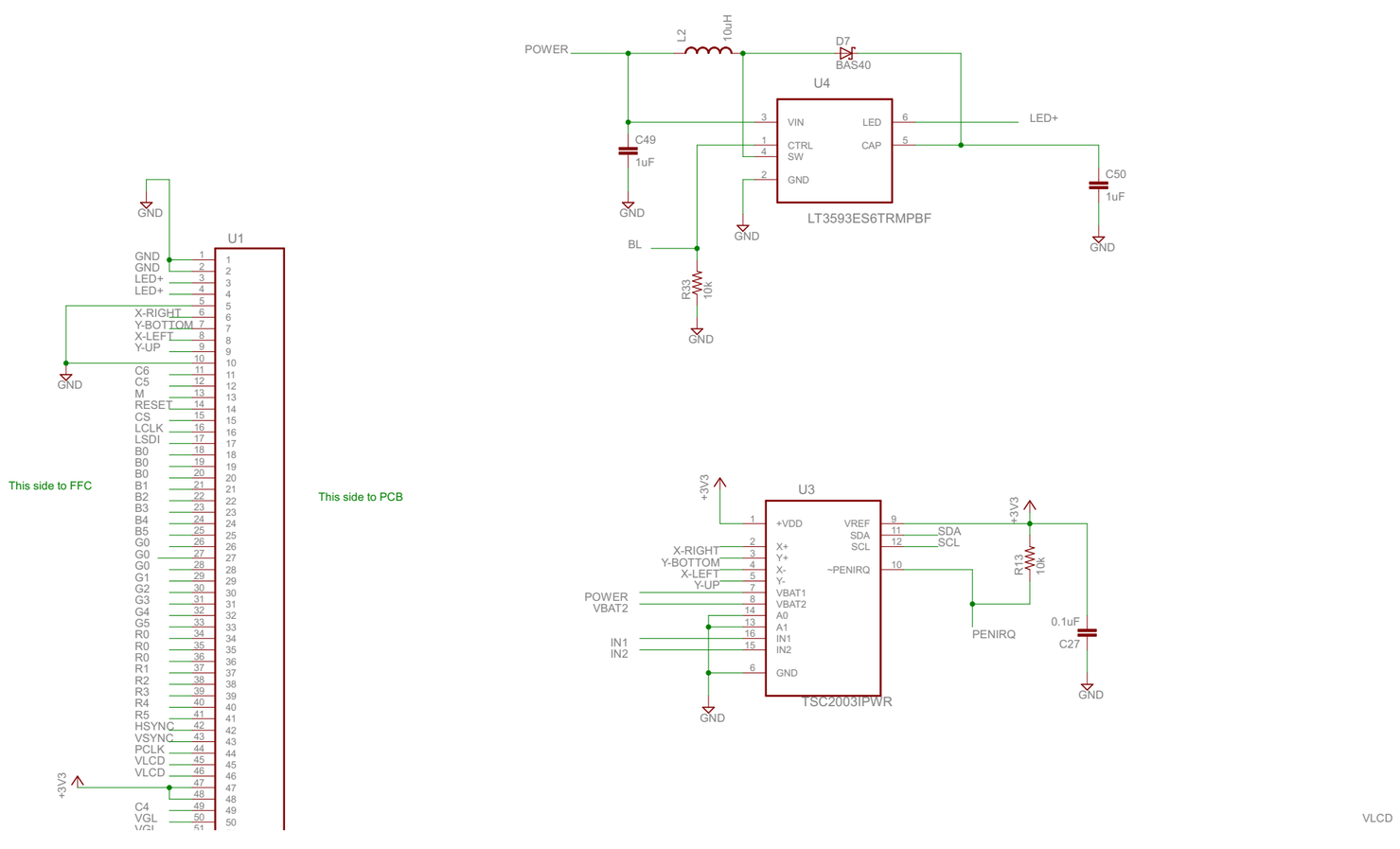
POWER
L
10uH
D7
BAS40
U4
VIN
CTRL
SW
GND
LED
CAP
LT3593ES6TRMPBF
LED+
C49
1uF
C50
1uF
BL
R33
10k
U1
GND
LED+
X-RIGHT
Y-BOTTOM
X-LEFT
Y-UP
C6
C5
M
RESET
CS
LCLK
LSDI
B0
B1
B2
B3
B4
B5
G0
G1
G2
G3
G4
G5
R0
R1
R2
R3
R4
R5
HSYNC
VSYNC
PCLK
VLCD
C4
VGL
This side to FFC
This side to PCB
+3V3
U3
+VDD
X+
Y+
X-
Y-
VBAT1
VBAT2
A0
A1
IN1
IN2
VREF
SDA
SCL
~PENIRQ
TSC2003IPWR
POWER
VBAT2
IN1
IN2
R13
10k
PENIRQ
0.1uF
C27
VLCD

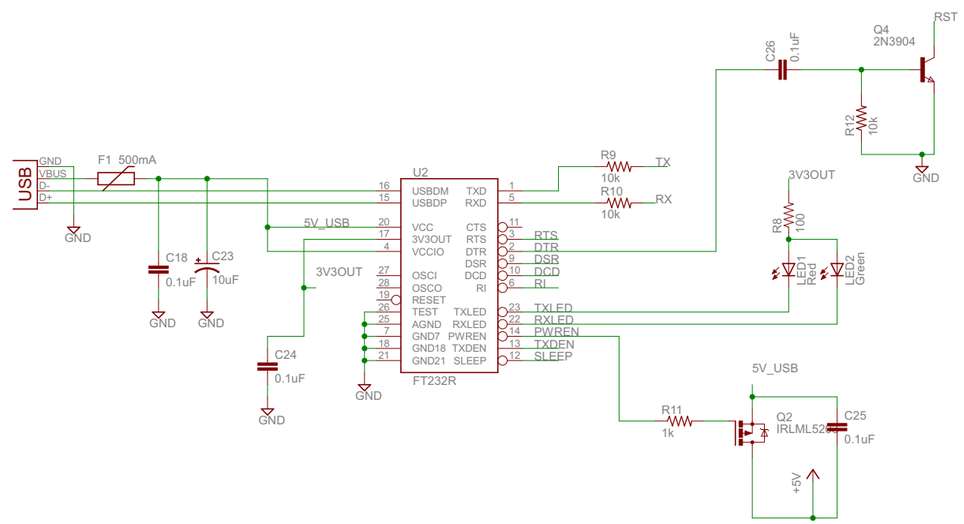
USB
GND
VBUS
D-
D+
F1 500mA
GND
C18
0.1uF
C23
10uF
GND
GND
5V_USB
3V3OUT
C24
0.1uF
GND
U2
USBDM
USBDP
VCC
3V3OUT
VCCIO
OSCI
OSCO
RESET
TEST
AGND
GND7
GND18
GND21
TXD
RXD
CTS
RTS
DTR
DSR
DCD
RI
TXLED
RXLED
PWREN
TXDEN
SLEEP
FT232R
GND
R9
10k
TX
R10
10k
RX
RTS
DTR
DSR
DCD
RI
TXLED
RXLED
PWREN
TXDEN
SLEEP
C26
0.1uF
Q4
2N3904
RST
R12
10k
GND
3V3OUT
R8
100
LED1
Red
LED2
Green
5V_USB
R11
1k
Q2
IRLML5203
C25
0.1uF
+5V

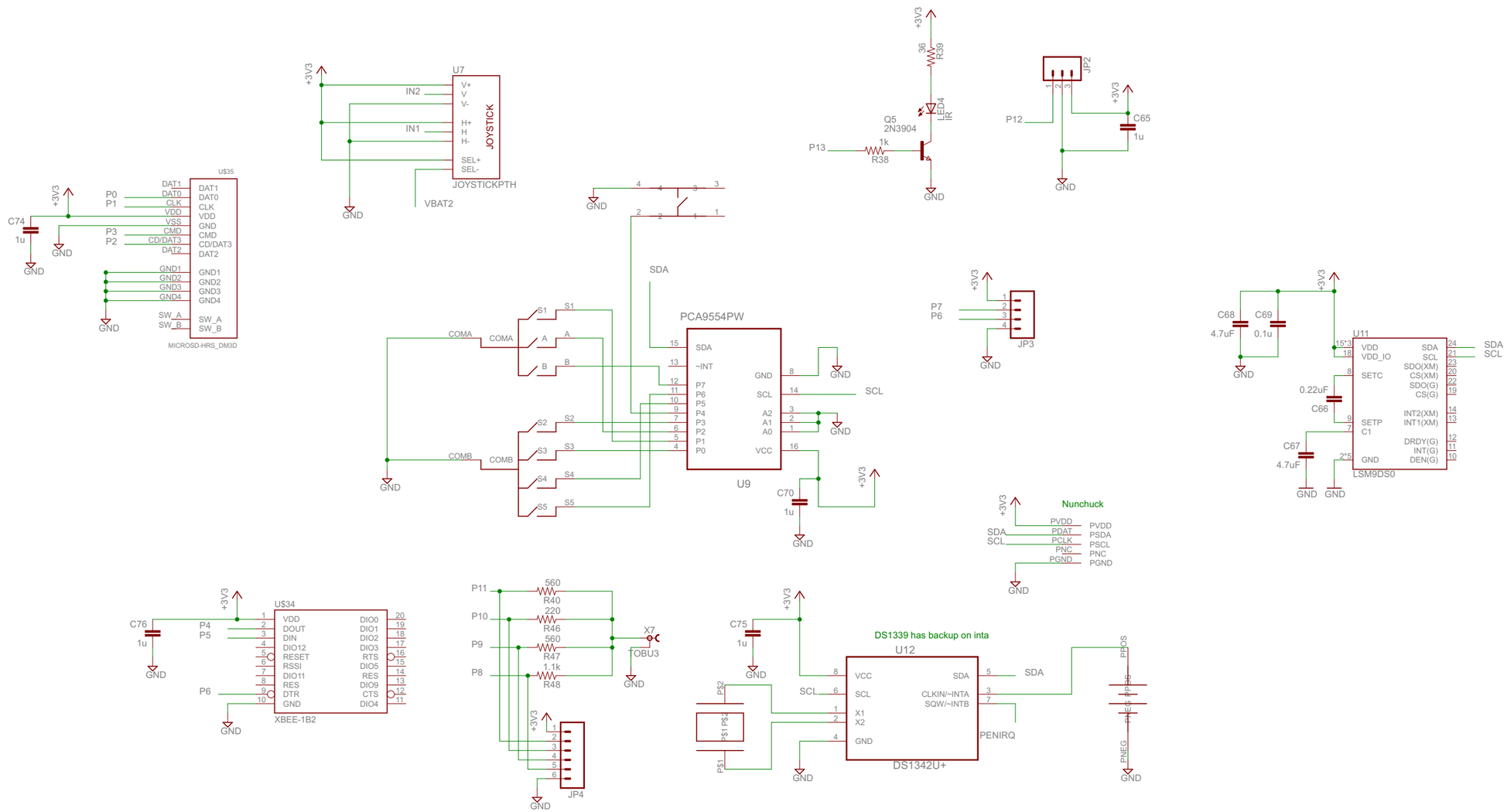
U7
JOYSTICK
JOYSTICKPTH
IN2
IN1
VBAT2
+3V3
GND
U$35
MICROSD-HRS_DM3D
C74
1u
P0
P1
P3
P2
DAT1
DAT0
CLK
VDD
VSS
CMD
CD/DAT3
DAT2
GND1
GND2
GND3
GND4
SW_A
SW_B
Q5
2N3904
P13
1k
R38
36
R39
LED4
IR
JP2
P12
C65
1u
PCA9554PW
U9
SDA
~INT
P7
P6
P5
P4
P3
P2
P1
P0
GND
SCL
A2
A1
A0
VCC
COMA
COMB
S1
S2
S3
S4
S5
C70
1u
JP3
P7
P6
C68
4.7uF
C69
0.1u
U11
LSM9DS0
VDD
VDD_IO
SETC
SETP
C1
SDA
SCL
SDO(XM)
CS(XM)
SDO(G)
CS(G)
INT2(XM)
INT1(XM)
DRDY(G)
INT(G)
DEN(G)
0.22uF
C66
C67
4.7uF
Nunchuck
PVDD
PDAT
PCLK
PNC
PGND
PSDA
PSCL
U$34
XBEE-1B2
C76
1u
P4
P5
P6
VDD
DOUT
DIN
DIO12
RESET
RSSI
DIO11
RES
DTR
DIO0
DIO1
DIO2
DIO3
RTS
DIO5
CTS
DIO4
P11
P10
P9
P8
560
R40
220
R46
560
R47
1.1k
R48
X7
TOBU3
JP4
C75
1u
DS1339 has backup on inta
U12
DS1342U+
VCC
X1
X2
CLKIN/~INTA
SQW/~INTB
PENIRQ
PS2
PS1
PPOS
PNEG

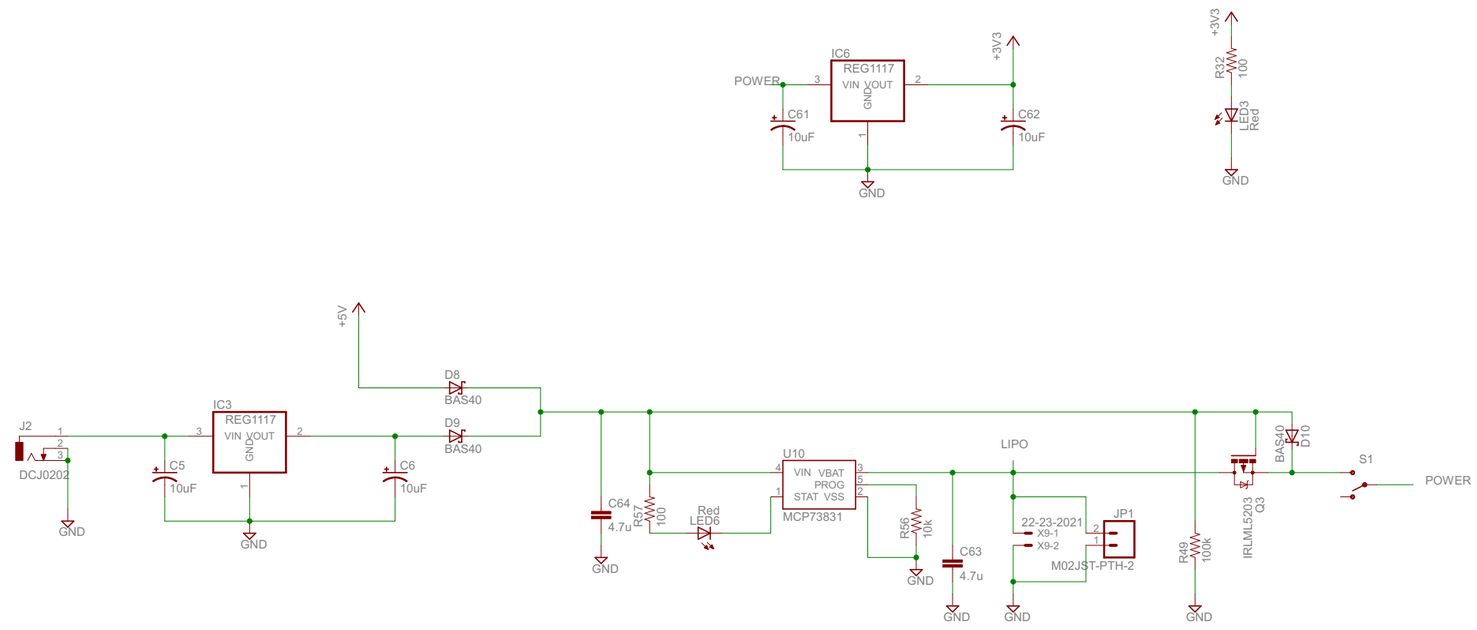
POWER
IC6
REG1117
VIN VOUT
GND
C61
10uF
C62
10uF
+3V3
GND
R32
100
LED3
Red
+5V
D8
BAS40
D9
BAS40
J2
DCJ0202
IC3
REG1117
VIN VOUT
GND
C5
10uF
C6
10uF
C64
4.7u
R57
100
Red
LED6
U10
VIN VBAT
PROG
STAT VSS
MCP73831
R56
10k
C63
4.7u
LIPO
22-23-2021
X9-1
X9-2
JP1
M02JST-PTH-2
R49
100k
IRLML5203
Q3
BAS40
D10
S1
POWER