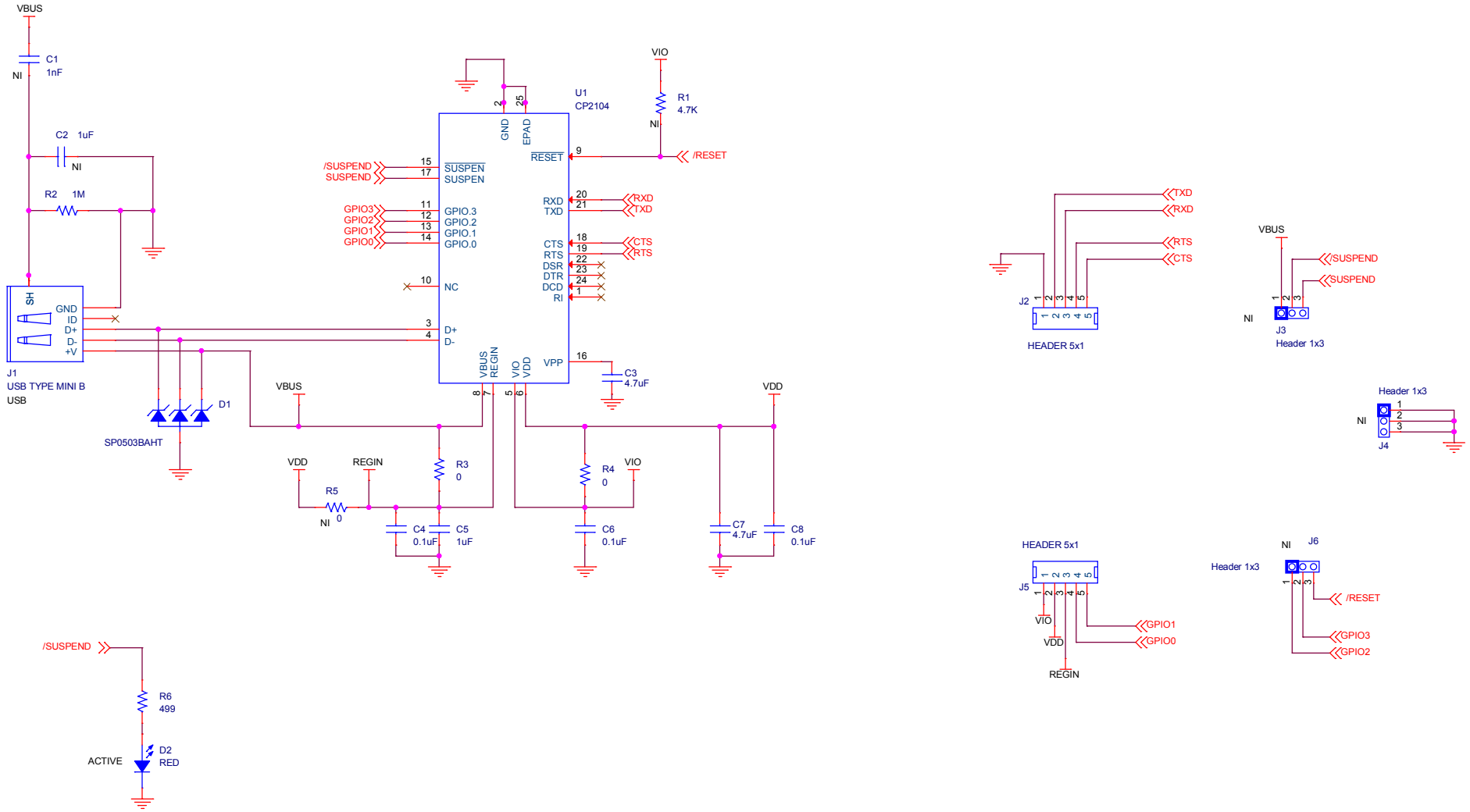


SILICON LABS

400 W Cesar Chavez
Austin, TX 78701

| | | |
|---|---|---|
| Title | CP2104_Mini_All | |
| Size B | Document Number CP2104_Mini | Rev 1.0 |
| Date: Thursday, August 15, 2013 | Sheet 1 of 1 | |