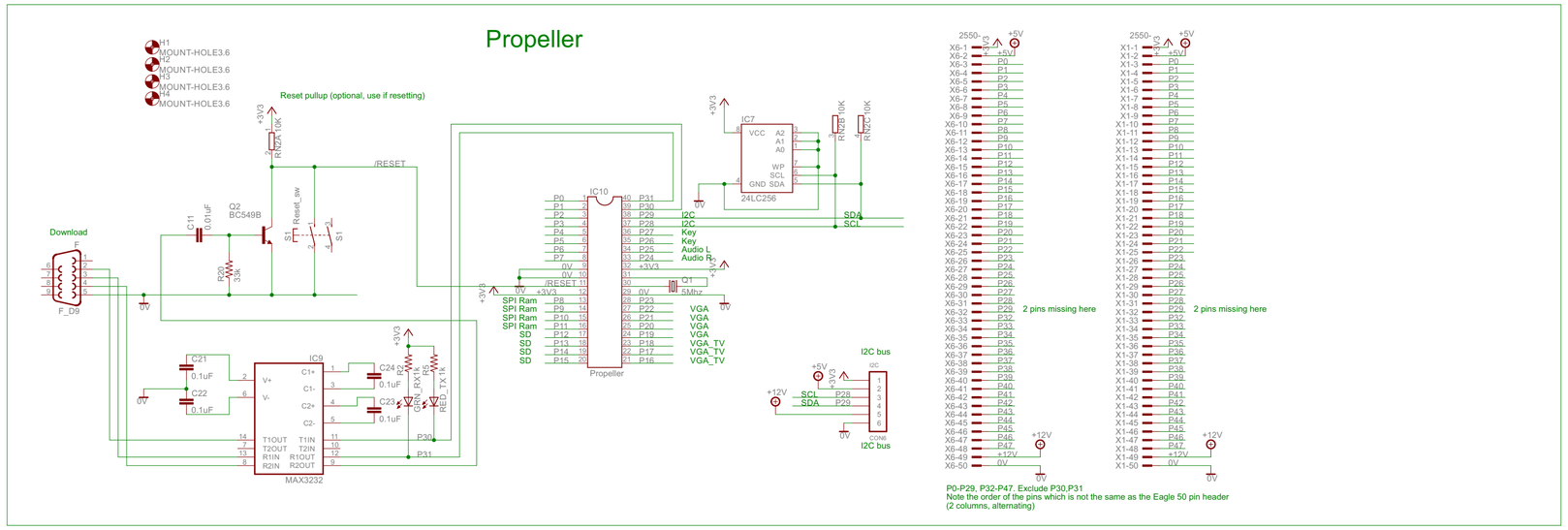
Propeller
H1 MOUNT-HOLE3.6
H2 MOUNT-HOLE3.6
H3 MOUNT-HOLE3.6
H4 MOUNT-HOLE3.6
Reset pullup (optional, use if resetting)
Download
F_D9
Q2 BC549B
C11 0.01uF
R20 3K
S1 Reset_sw
/RESET
IC10
IC9
MAX3232
C21 0.1uF
C22 0.1uF
C23 0.1uF
C24 0.1uF
R24 1K
R25 1K
GREN_RX1K
RED_TX 1K
IC7
24LC256
RN2B 10K
RN2C 10K
SDA
SCL
I2C
Key
Audio L
Audio R
Q1 5Mhz
SPI Ram
SD
VGA
VGA_TV
Propeller
I2C bus
2550-
X6-1 +5V
X6-2 +5V
X6-3 P0
X6-4 P1
X6-5 P2
X6-6 P3
X6-7 P4
X6-8 P5
X6-9 P6
X6-10 P7
X6-11 P8
X6-12 P9
X6-13 P10
X6-14 P11
X6-15 P12
X6-16 P13
X6-17 P14
X6-18 P15
X6-19 P16
X6-20 P17
X6-21 P18
X6-22 P19
X6-23 P20
X6-24 P21
X6-25 P22
X6-26 P23
X6-27 P24
X6-28 P25
X6-29 P26
X6-30 P27
X6-31 P28
X6-32 P29
X6-33 P32
X6-34 P33
X6-35 P34
X6-36 P35
X6-37 P36
X6-38 P37
X6-39 P38
X6-40 P39
X6-41 P40
X6-42 P41
X6-43 P42
X6-44 P43
X6-45 P44
X6-46 P45
X6-47 P46
X6-48 P47
X6-49 +12V
X6-50 0V
2 pins missing here
X1-1 +5V
X1-2 +5V
X1-3 P0
X1-4 P1
X1-5 P2
X1-6 P3
X1-7 P4
X1-8 P5
X1-9 P6
X1-10 P7
X1-11 P8
X1-12 P9
X1-13 P10
X1-14 P11
X1-15 P12
X1-16 P13
X1-17 P14
X1-18 P15
X1-19 P16
X1-20 P17
X1-21 P18
X1-22 P19
X1-23 P20
X1-24 P21
X1-25 P22
X1-26 P23
X1-27 P24
X1-28 P25
X1-29 P26
X1-30 P27
X1-31 P28
X1-32 P29
X1-33 P32
X1-34 P33
X1-35 P34
X1-36 P35
X1-37 P36
X1-38 P37
X1-39 P38
X1-40 P39
X1-41 P40
X1-42 P41
X1-43 P42
X1-44 P43
X1-45 P44
X1-46 P45
X1-47 P46
X1-48 P47
X1-49 +12V
X1-50 0V
2 pins missing here
P0-P29, P32-P47. Exclude P30,P31
Note the order of the pins which is not the same as the Eagle 50 pin header
(2 columns, alternating)

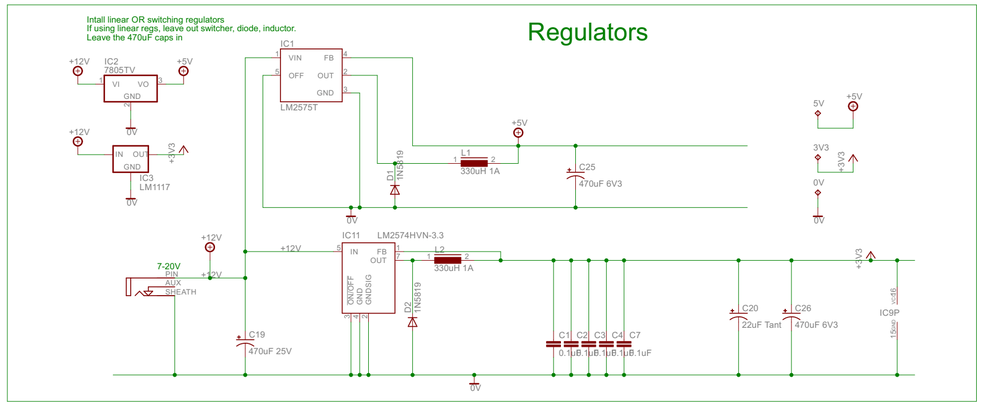
Regulators
Intall linear OR switching regulators
If using linear regs, leave out switcher, diode, inductor.
Leave the 470uF caps in
IC2 7805TV
IC3 LM1117
IC1 LM2575T
L1 330uH 1A
C25 470uF 6V3
D1 1N5819
IC11 LM2574HVN-3.3
L2 330uH 1A
D2 1N5819
7-20V
C19 470uF 25V
C20 22uF Tant
C26 470uF 6V3
C1 0.1uF
C2 0.1uF
C3 0.1uF
C4 0.1uF
C7 0.1uF
IC9P

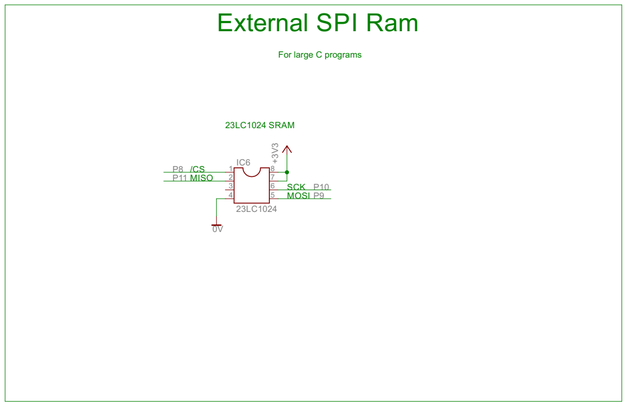
External SPI Ram
For large C programs
23LC1024 SRAM
IC6
23LC1024
P8 /CS
P11 MISO
SCK P10
MOSI P9

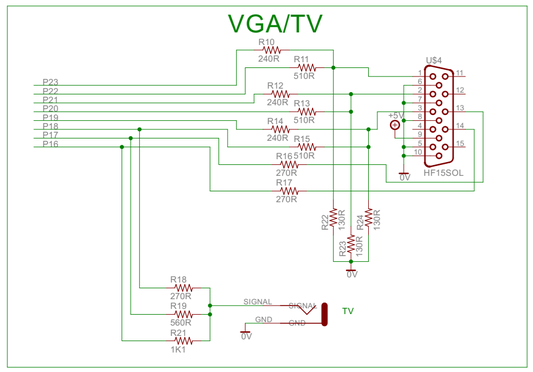
VGA/TV
R10 240R
R11 510R
R12 240R
R13 510R
R14 240R
R15 510R
R16 270R
R17 270R
US4
HF15SOL
R22 130R
R23 130R
R24 130R
R18 270R
R19 560R
R21 1K1
SIGNAL
GND
TV

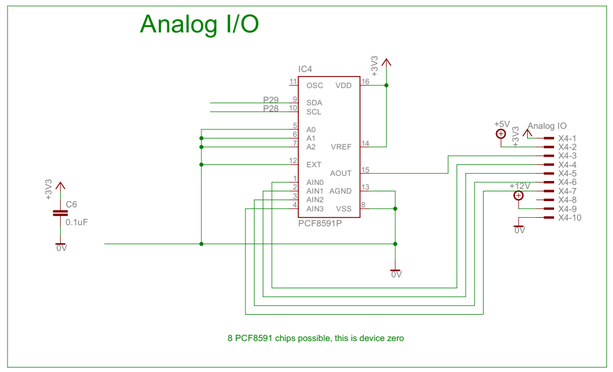
Analog I/O
IC4
PCF8591P
C6 0.1uF
Analog IO
X4-1
X4-2
X4-3
X4-4
X4-5
X4-6
X4-7
X4-8
X4-9
X4-10
8 PCF8591 chips possible, this is device zero

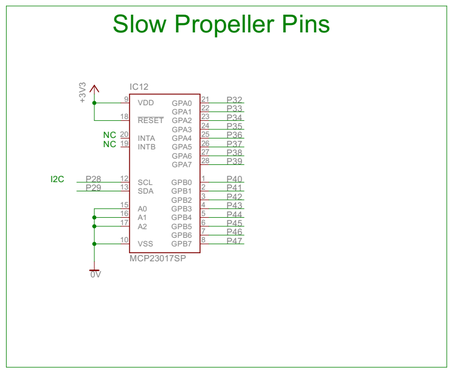
Slow Propeller Pins
IC12
MCP23017SP
NC
NC
I2C

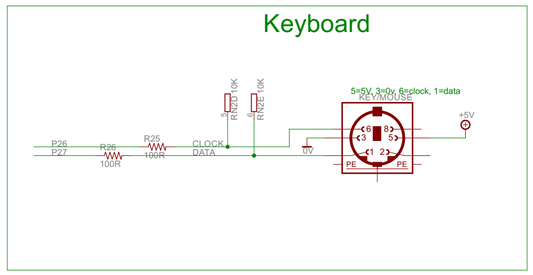
Keyboard
RN2D 10K
RN2E 10K
5=5V, 3=0v, 6=clock, 1=data
KEYMOUSE
R26 100R
R25 100R
CLOCK
DATA

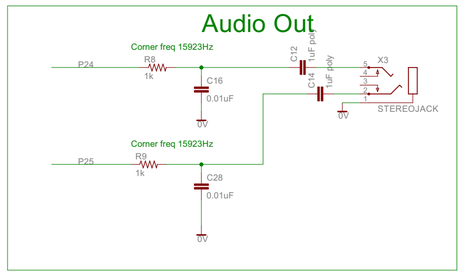
Audio Out
Corner freq 15923Hz
R8 1k
C16 0.01uF
C12 1uF poly
C14 1uF poly
X3
STEREOJACK
Corner freq 15923Hz
R9 1k
C28 0.01uF

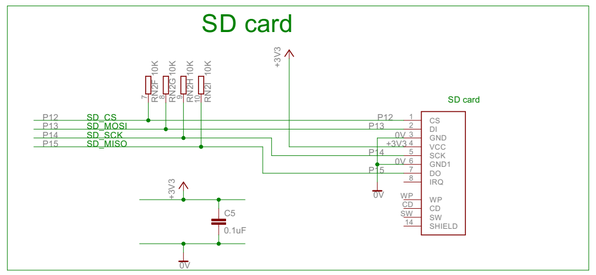
SD card
RN2F 10K
RN2G 10K
RN2H 10K
RN2I 10K
P12 SD_CS
P13 SD_MOSI
P14 SD_SCK
P15 SD_MISO
C5 0.1uF