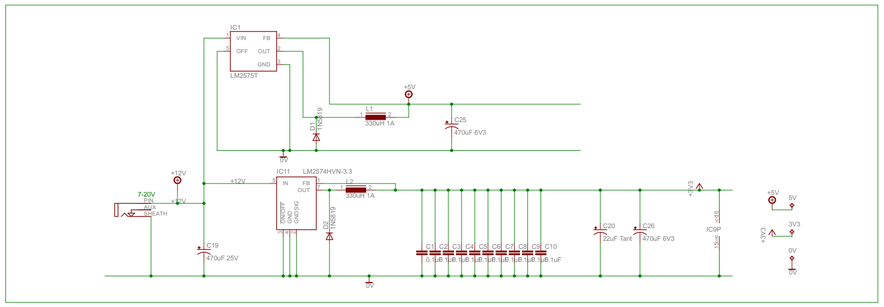
IC1
LM2575T
L1
330uH 1A
C25
470uF 6V3
IC11
LM2574HVN-3.3
330uH 1A
7-20V
C19
470uF 25V
C20
22uF Tank
C26
470uF 6V3
IC9P
5V
3V3
0V

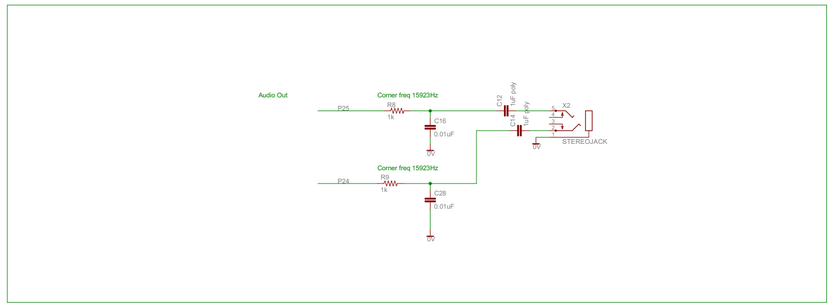
Audio Out
Corner freq 15923Hz
R8
1k
C16
0.01uF
C12
Corner freq 15923Hz
R9
1k
C28
0.01uF
X2
STEREOJACK

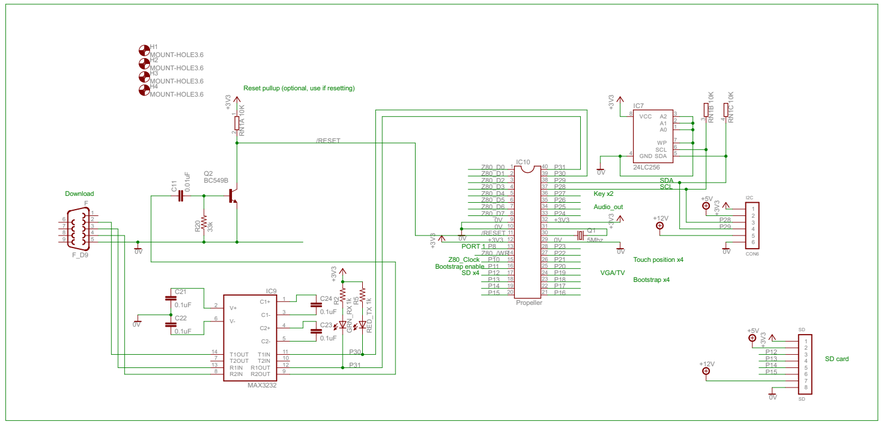
Reset pullup (optional, use if resetting)
/RESET
Download
F_DB
Q2
BC549B
IC7
24LC256
SDA
SCL
Key x2
Audio_out
Touch position x4
VGA/TV
Bootstrap x4
PORT 1
Z80_Clock
Bootstrap enable
SD x4
Propeller
MAX3232
SD card

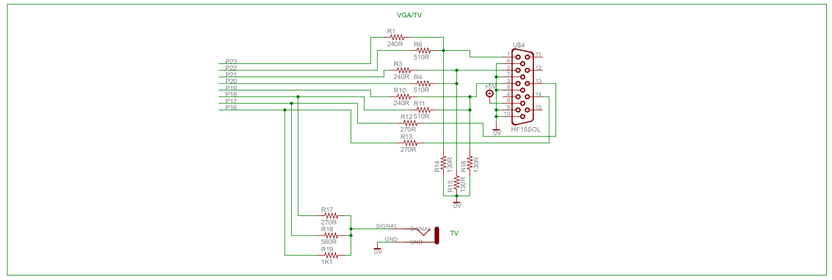
VGA/TV
HP15SOL
TV
Keyboard
5=5V, 3=0v, 6=clock, 1=data
24LH08B

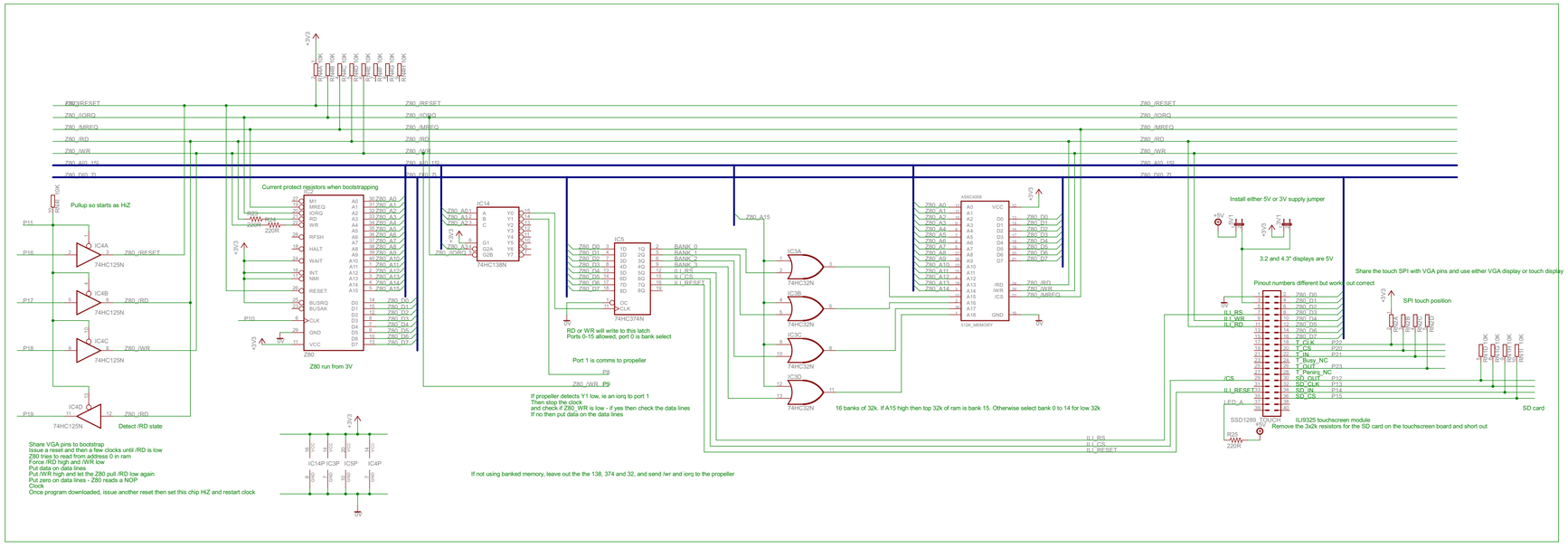
Pullup so starts as HiZ
Current protect resistors when bootstrapping
Z80
Z80 run from 3V
74HC125N
Detect /RD state
74HC138N
74HC374N
RD or WR will write to this latch
Ports 0-15 allowed, port 0 is bank select
Port 1 is comms to propeller
If propeller detects Y1 low, ie an iorq to port 1
Then stop the clock
and check if Z80_WR is low - if yes then check the data lines
If no then put data on the data lines
16 banks of 32k. If A15 high then top 32k of ram is bank 15. Otherwise select bank 0 to 14 for low 32k
If not using banked memory, leave out the the 138, 374 and 32, and send /wr and iorq to the propeller
Share VGA pins to bootstrap
Issue a reset and then a few clocks until /RD is low
Z80 tries to read from address 0 in ram
Force /RD high and /WR low
Put data on data lines
Put /WR high and let the Z80 pull /RD low again
Put zero on data lines - Z80 reads a NOP
Clock
Once program downloaded, issue another reset then set this chip HiZ and restart clock
Install either 5V or 3V supply jumper
3.2 and 4.3" displays are 5V
Pinout numbers different but works out correct
Share the touch SPI with VGA pins and use either VGA display or touch display
SPI touch position
SSD1289_TOUCH
ILI9325 touchscreen module
Remove the 3x2k resistors for the SD card on the touchscreen board and short out
SD card