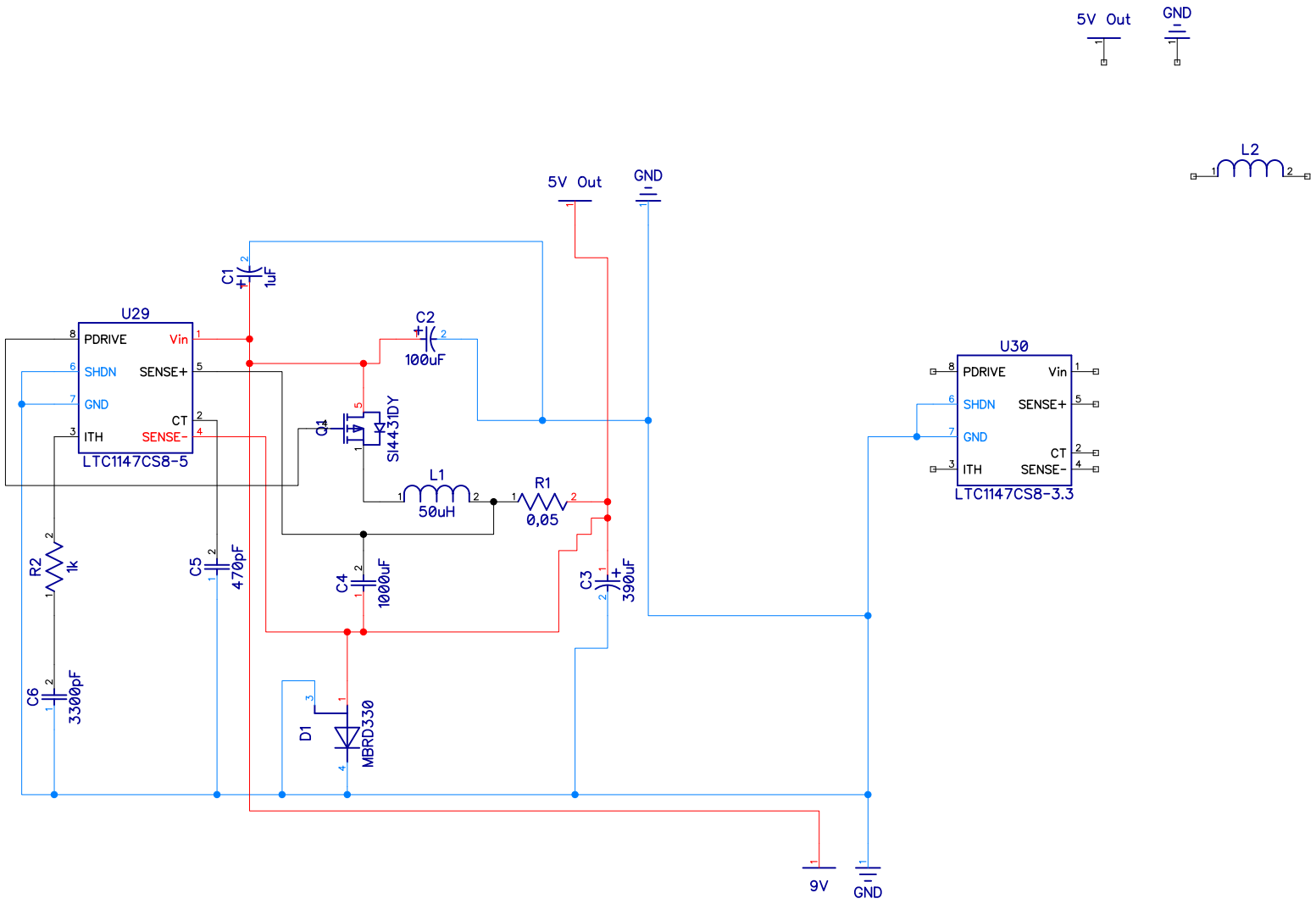RevNo	Silverado V1.0 - Power Supply	30.5.2013	Signature	Checked