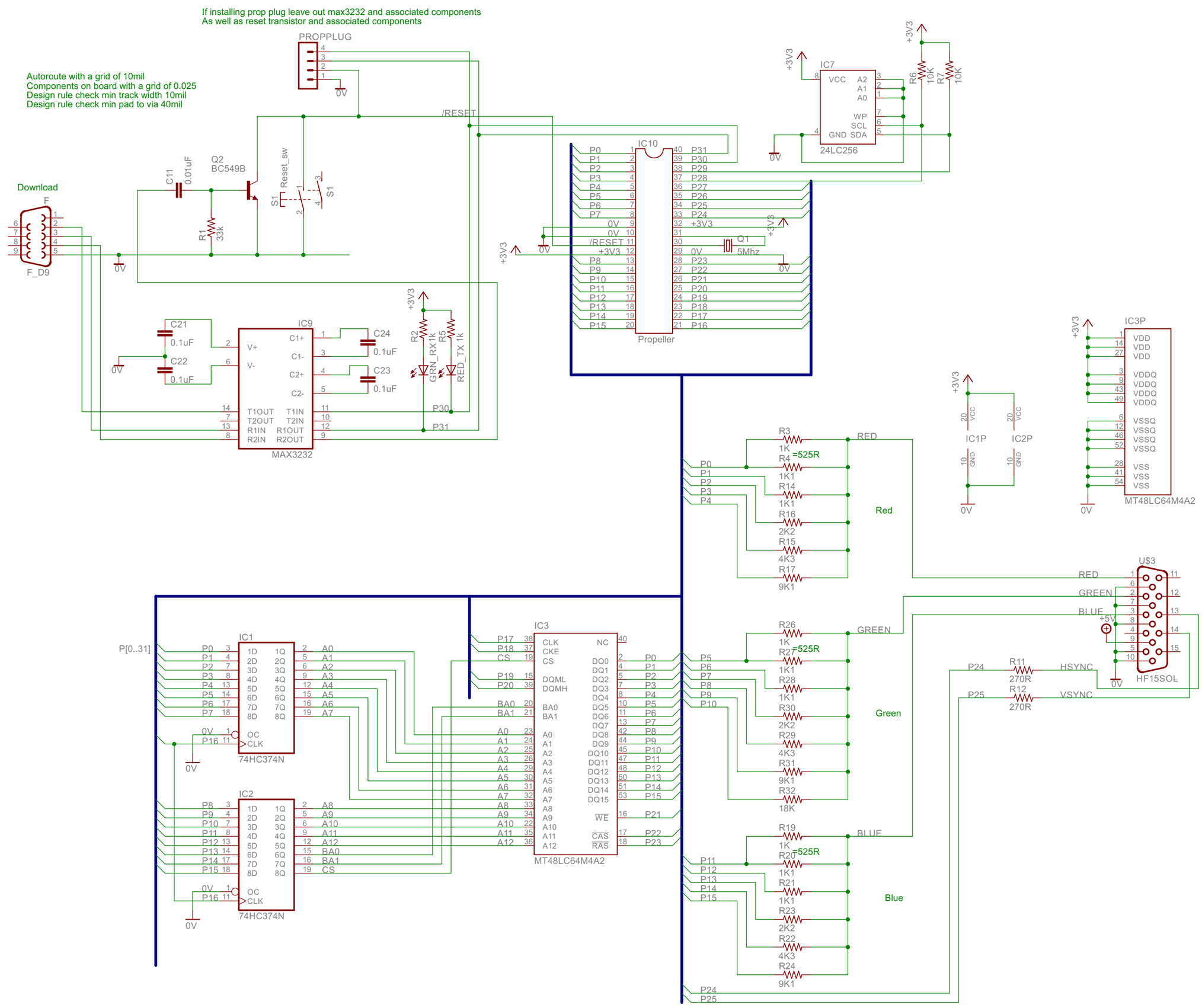
If installing prop plug leave out max3232 and associated components
As well as reset transistor and associated components
Autoroute with a grid of 10mil
Components on board with a grid of 0.025
Design rule check min track width 10mil
Design rule check min pad to via 40mil
PROPPLUG
Download
F_D9
Q2
BC549B
C11
0.01uF
R1
33k
Reset_sw
S1
/RESET
IC10
Propeller
Q1
5Mhz
IC7
24LC256
R6
10K
R7
10K
IC9
MAX3232
C21
0.1uF
C22
0.1uF
C24
0.1uF
C23
0.1uF
R2
GRN_RX 1k
R5
RED_TX 1k
P30
P31
IC1P
IC2P
IC3P
MT48LC64M4A2
R3
1K
R4
=525R
1K1
R14
1K1
R16
2K2
R15
4K3
R17
9K1
RED
Red
R26
1K
R27
=525R
1K1
R28
1K1
R30
2K2
R29
4K3
R31
9K1
R32
18K
GREEN
Green
R19
1K
R20
=525R
1K1
R21
1K1
R23
2K2
R22
4K3
R24
9K1
BLUE
Blue
U$3
HF15SOL
HSYNC
VSYNC
R11
270R
R12
270R
P[0..31]
IC1
74HC374N
IC2
74HC374N
IC3
MT48LC64M4A2