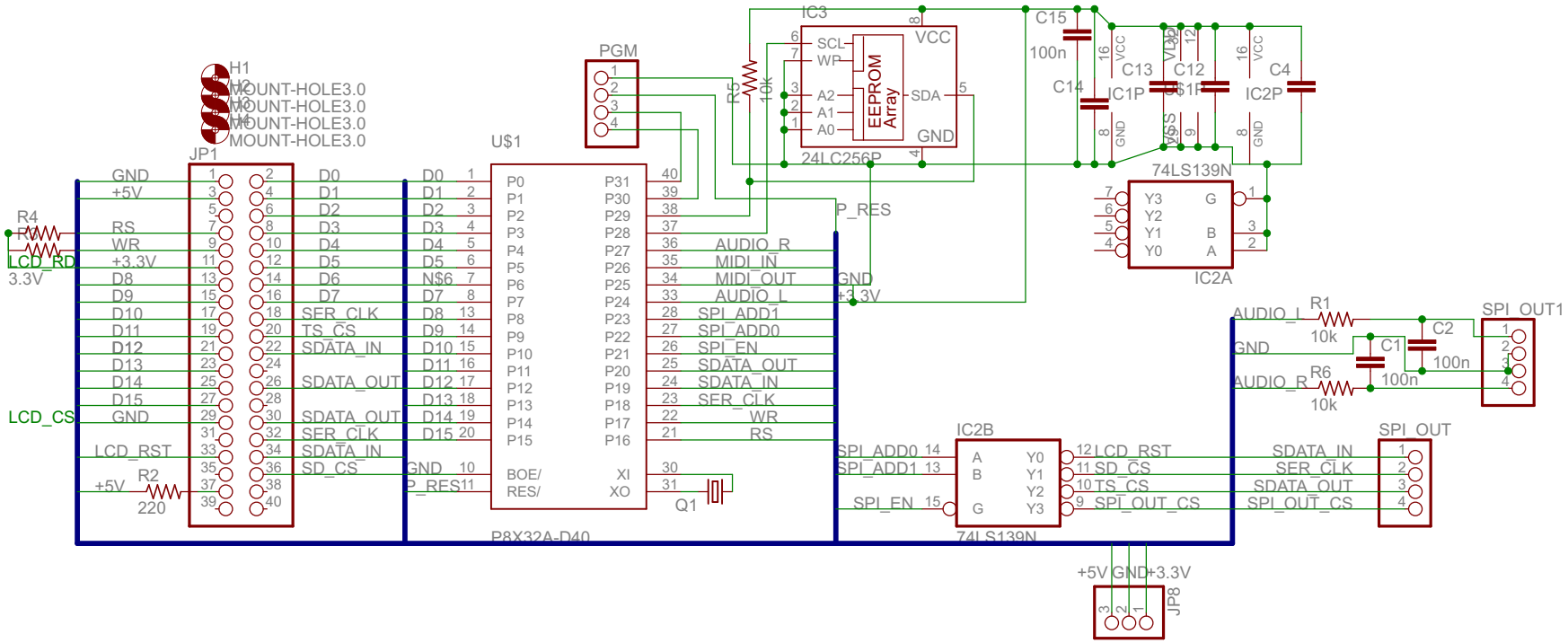
H1
MOUNT-HOLE3.0
JP1
U$1
P8X32A-D40
PGM
IC3
24LC256P
EEPROM Array
SCL
WP
A2
A1
A0
VCC
SDA
GND
R5
10k
C15
100n
C14
C13
C12
C4
IC1P
IC1N
IC2P
74LS139N
IC2A
IC2B
R4
LCD_RD
3.3V
R2
220
LCD_CS
LCD_RST
SD_CS
SDATA_IN
SDATA_OUT
SER_CLK
TS_CS
SPI_OUT_CS
SPI_EN
SPI_ADD0
SPI_ADD1
AUDIO_L
AUDIO_R
MIDI_IN
MIDI_OUT
P_RES
Q1
R1
10k
R6
10k
C1
100n
C2
100n
SPI_OUT1
SPI_OUT
JP8
+5V
GND
+3.3V