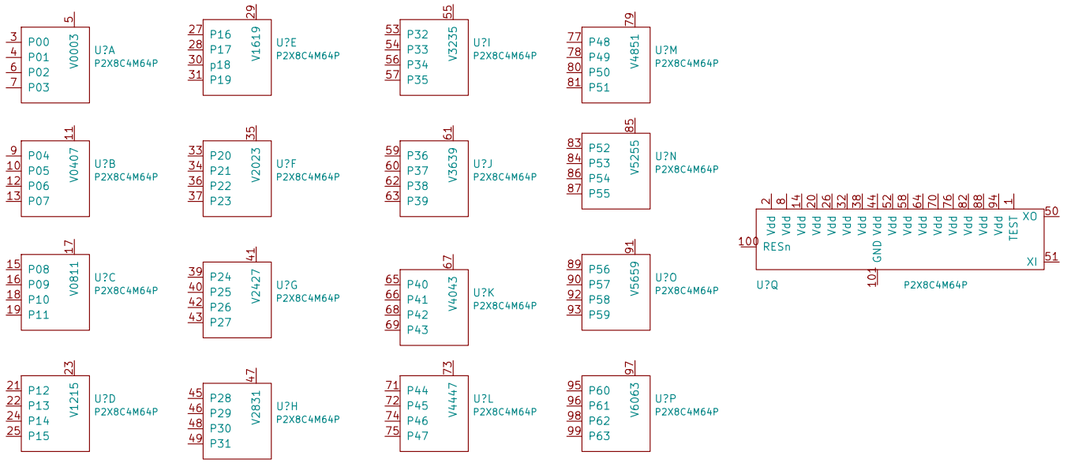


Sheet: /
File: Kicad Model.sch

**Title:**

| Size: B | Date: | Rev: |
|---|---|---|
| KiCad E.D.A. kicad (5.1.4)-1 | | Id: 1/1 |