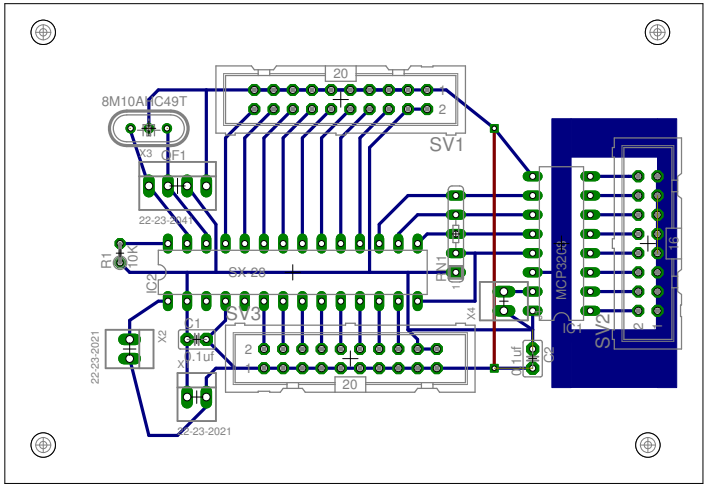
20
SV1
8M10A1C49T
X3
GF1
22-23-2021
R1
10K
IC2
OK 20
EN1
SV3
X4
MCP3204
SV2
X2
C1
0.1uf
X1
C1uf
C2
20
22-23-2021
22-23-2021