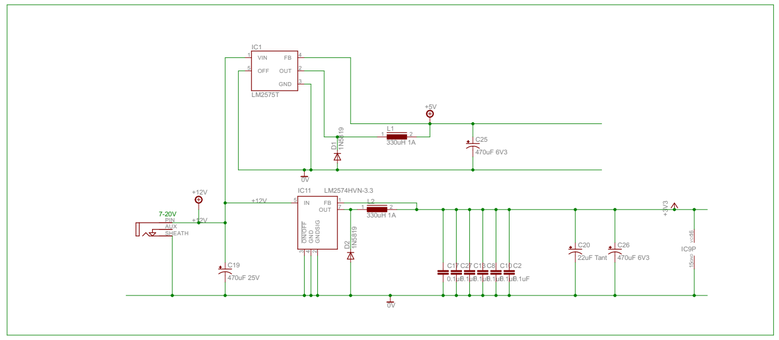
IC1
LM2575T
VIN
FB
OFF
OUT
GND
+5V
L1
330uH 1A
C23
470uF 6V3
D4
1N5819
IC11
LM2574HVN-3.3
IN
FB
OUT
ON/OFF
GND
GND
L2
150uH 1A
D3
1N5819
+12V
7-20V
BATT
C19
470uF 25V
C17 C27 C18 C28 C19 C2
0.1uF 0.1uF 0.1uF 0.1uF 0.1uF 0.1uF
C20
22uF Tant
C26
470uF 6V3
+3V3
IC38P
0V

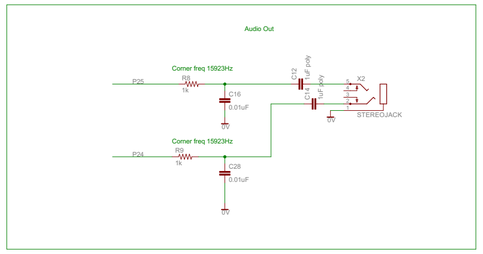
Audio Out
Corner freq 15923Hz
P25
R8
1k
C16
0.01uF
C12
0.1uF poly
C17
0.1uF poly
X2
STEREOJACK
Corner freq 15923Hz
P24
R9
1k
C28
0.01uF
0V

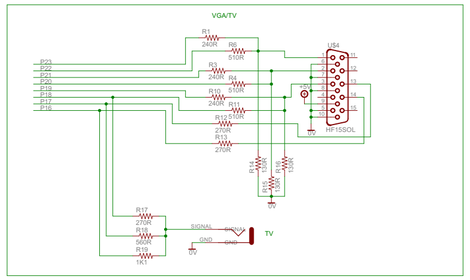
VGA/TV
P23
P22
P21
P20
P19
P18
P17
P16
R1
240R
R2
510R
R3
240R
R4
510R
R10
240R
R11
510R
R12
270R
R13
270R
U64
HF15SOL
R14
330R
R15
330R
R17
270R
R18
560R
R19
1K1
SIGNAL
GND
TV
0V

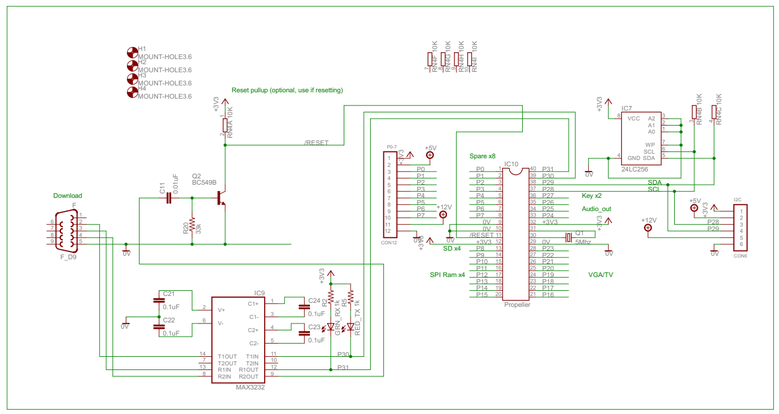
H1
MOUNT-HOLE3.6
H2
MOUNT-HOLE3.6
H3
MOUNT-HOLE3.6
H4
MOUNT-HOLE3.6
Reset pullup (optional, use if resetting)
R6
10k
/RESET
Q2
BC549B
C11
0.1uF
R5
33k
Download
F_D9
CON12
IC9
MAX3232
C21
0.1uF
C22
0.1uF
C24
0.1uF
C23
0.1uF
R7
10k
R8
10k
R9
10k
R10
10k
R11
10k
R12
10k
R13
10k
R14
10k
Spare x8
IC10
Propeller
Key x2
Audio_out
Q1
5MHz
VGA/TV
SD x4
SPI Ram x4
IC7
24LC256
VCC
A2
A1
A0
WP
SCL
GND
SDA
SDA
SCL
R15B 10K
R16B 10K
IRC
CON4

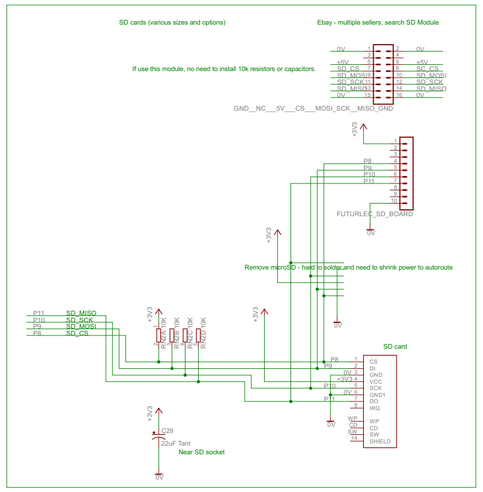
SD cards (various sizes and options)
Ebay - multiple sellers, search SD Module
If use this module, no need to install 10k resistors or capacitors.
0V
+5V
SD_CS
SD_MOSI
SD_SCK
SD_MISO
0V
GND__NC__5V__CS__MOSI_SCK__MISO_GND
FUTURLEC_SD_BOARD
Remove microSD - hard to solder and need to shrink power to autoroute
P11 SD_MISO
P10 SD_SCK
P9 SD_MOSI
P8 SD_CS
R20 10K
R21 10K
R22 10K
R23 10K
SD card
CS
DI
GND
VCC
SCK
GND1
DO
IRQ
WP
CD
SW
SHIELD
C29
22uF Tant
Near SD socket

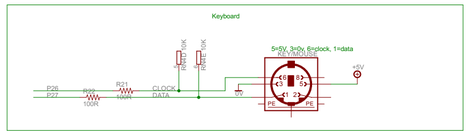
Keyboard
R30
10K
R32
10K
5=5V, 3=0v, 6=clock, 1=data
5V_MOUSE
P26
P27
R29
100K
R31
100K
CLOCK
DATA
+5V
0V

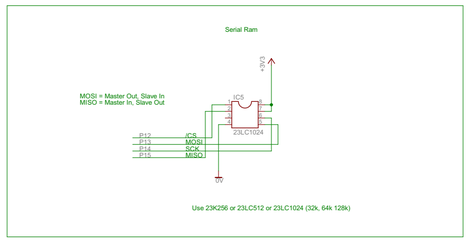
Serial Ram
MOSI = Master Out, Slave In
MISO = Master In, Slave Out
IC6
23LC1024
P12 /CS
P13 MOSI
P14 SCK
P15 MISO
+3V3
0V
Use 23K256 or 23LC512 or 23LC1024 (32k, 64k 128k)